DEVELOPMENT OF A UTILITY-INTERACTIVE INVERTER FOR A PHOTOVOLTAIC SYSTEM

PREPARED FOR

Renewable Energy Branch

Energy, Mines and Resources Canada

Ottawa, Canada

DSS Contract File No.37ST.23216-6-6123

31 March 1988

PREPARED BY

V.Rajagopalan

Laboratoire départemental de recherche en électronique industrielle

Département d'ingénierie

Université du Québec à Trois-Rivières

Trois-Rivières, Québec, G8Y 4M2

Tel: (819) 376-5071 ext. 3712

SCIENTIFIC AUTHORITY

Lawrence Vézina

Ministère d'énergie, mines et ressources

460 rue O'Connor, 4e étage

Ottawa, Ontario K1A 0E4

89-05635/

ACKNOWLEDGEMENTS

The author would like to thank Mr. John Ayer of the National Research Council (Victoria) Canada for his enthusiastic support and interest in this project. Thanks are also due to Mr. Jacques Domey of the National Research Council (Ottawa) Canada for his help in arranging for the loan of the Inverter Test Facility for Utility-Interactive Photovoltaic Systems from the National Research Council, Ottawa to our research group during the period of this project.

The author would like to thank Dr.K. Al Haddad, Dr.K.S.Rajashekara and Mr. A. Charette for their numerous contributions to this project. Thanks are also due to Mr.R.J.Holmes, Mr.D.L.Gauthier and K.Sequens of the CTS of Canada Limited, Streetsville, Ontario, the subcontractor to this project, for their active collaboration in the development of the prototypes of the inverter.

The author would like to thank Mr. J.Poisson and Ms.M.Giroux of the Département d'ingénierie of the Université du Québec à Trois-Rivières, for their help in the realization of this project. Mr. M.Potvin of the services des finances at the Université du Québec à Trois-Rivières deserves special thanks for his help in the preparation of the financial reports of this project.

The author would like to thank Mr.J.L.McClung and Mr.L.Vézina of the Energy, Mines and Resources Canada and Mr. P. Hurens and Ms. A. Samson of the Supply and Services Canada for their collaboration and support to this project.

DISCLAIMERS BY ENERGY,MINES AND RESOURCES CANADA AS TO THE CONTENT OF THE MATERIAL

This report is distributed for informational purposes only and does not necessarily reflect the views of the Government of Canada or constitute an endorsement of any commercial product or person. Neither canada nor its ministers, officers, employees or agents make any warranty in respect of this report or assume any liability arising out of this report.

ABSTRACT

The objective of this project is to develop a cost-effective "state of the art" sinusoidal inverter of 5 kW capacity meeting the required specifications adapted to residential photovoltaic applications. After a careful evaluation of a number of possible configurations, the preferred choice of the power circuit is a dual series resonant converter with phase-shifted operation. This approach appears to have the greatest potential for cost reduction when compared to other transformer-isolated designs intended for residential applications. This report describes the details of a 5 kW design intended for residential applications. The theory of operation, detailed design and some operational results are given. The inverter was designed to deliver utility quality power to the residential mains. The maximum utility quality power obtained using the prototype was about 1 kW. Total harmonic current distortion of less than 5 % and efficiencies around 85% were achieved. The prototype was developed in collaboration with a Canadian manufacturer of industrial electronic equipments. Due to non-availability of high performance power semiconductor devices at reasonable cost, it was not possible to attain the projected output of 5 kW. Further work will be needed to improve the performance of resonant converters and to research new topologies for converters. The technology developed during the course of this project, could be used to develop high performance dc-dc converters used in power supplies for laser, X-ray and welding applications.

PREFACE

This project report is submitted which forms an integral part of the conditions of contract signed with the Department of Supply and Services Canada for the development of a utility-interactive inverter for a photovoltaic system. The intended purpose of this project is to develop a utility-interactive "state of the art" sinusoidal inverter of 5 kW capacity in collaboration with a subcontractor. The main emphasis in this design is on the substitution of solid state switching devices to accomplish functions which in the past utilized bulky inductive and capacitive elements. In addition, special consideration will be given with the object of obtaining high quality sinusoidal current output, high efficiency and high system power factor at reasonable cost. The subcontractor, who is a Canadian manufacturer of industrial electronics equipment, is interested in acquiring this technology which would enable him to upgrade the existing technologies using thyristors. It is also intended to make the design data and comprehensive test report available to interested Canadian manufacturers of utility-interactive inverters in applications other than photovoltaic systems.

The scope of this work is to consider a wide range of possible configurations of the power circuits and select the one that will meet the typical specifications as applied to a utility-interactive inverter adapted to a photovoltaic system[1]. The development of Maximum Power Track (MPT) control as applied to a photovoltaic system of the utility-interactive inverter does not fall within the scope of this project.

The development of innovative utility-interactive inverters adapted to photovoltaic systems has been very active in the United States of America through the Sandia National Research Laboratories. Many innovative designs have been recently proposed as a result of research contracts awarded to United States industries and universities in the capacity ranges as applied to residential systems[2]. The support that we received from the Renewable Energy Branch of the Department of Energy, Mines and Resources Canada has been helpful in the development of Canadian expertise in innovative utility-interactive inverters. The results of this work will be particularly helpful to export-oriented industrial electronics equipment manufacturers working in concurrence

with the manufacturers of photovltaic systems to explore the possible applications of this technology in the isolated northern parts of Canada and in other developing nations of the world where the solar energy is available in abundance.

The prototype developed in this project uses a novel device called "Dual Thyristor", which has been developed and patented by the research group from the "Laboratoire d'électrotechnique et d'électronique industrielle" of Toulouse, France [3]. These devices have been used with some modifications for the power stage. Any intended commercialisation of this equipment should take into consideration any possible infringement of patents in existence.

TABLE OF CONTENTS

Section		page
1	Executive Summary	1
2.	Résumé	4
3.	Introduction	7
4.	Objectives	9
5.	Method	11
5.1	Critical Evaluation of Power Circuit Configurations	11
5.2	Power Circuit Design	14
5.3	Control Circuit Design	20
5.4	Packaging	23
6.	Test Results	24
7.	Discussion of results	25
8.	Figures and Tables	26
9.	Conclusions	44
10.	Recommendations	46
11.	References	47
12.	Appendices	49

1. EXECUTIVE SUMMARY

Past work on power conditioning systems that interface between photovoltaic arrays and utility systems have concentrated on modification of two well known power conversion equipments that are commonly used in phase-controlled rectifiers for d.c.motor drives and uninterruptible power supplies. These two power conversion equipments are the current-fed line-commutated thyristor inverter and the voltage-fed forced-commutated inverter. For reasons of voltage, current and power rating availability at reasonably low cost, the thyristor has been the preferred switching device in these power conversion systems. However, these converters must use a large quantity of power-rated auxiliary components such as capacitors and inductors in order to obtain a utility quality sinusoidal output current. Further, in order to provide a galvanic isolation between the d.c. input and the a.c. mains, a bulky 60 Hz transformer should be used.

Recent advances in semiconductor switching devices have made available bipolar power transistors and power mosfet transistors, whose voltage, current and power ratings seem very promising for the development of photovoltaic power conditioning systems in the residential (5-10 kW) and intermediate power ranges (10-100 kW). The objectives of the following project are:

1. To design a laboratory prototype of 5 kW utility-interactive inverter based on an extensive analysis of available proof of concept designs.
2. To have the prototype developed in collaboration with a Canadian manufacturer of industrial electronics equipment and test the developed prototype and have the actual performance evaluated.
3. To make the detailed design data and comprehensive test report available to interested Canadian manufacturers of industrial electronics equipment.

After a careful consideration of various proof of concept designs, a dual series resonant converter with phase-shifted operation was chosen for the inverter [4-7]. The analysis of the converter operation was done using a general purpose power converter simulator[8] and also static characteristics of the converter were obtained using simplified assumptions[9]. These analyses enabled to compute the ratings of the components of the power

stage. A laboratory bread-board was first developed for a power rating of about 1 kW. All relevant drawings and design data for power as well as control circuits were supplied to the sub-contractor who built the prototype. The prototype was tested using the test facility that has been made available to this project by the National Research Council of Canada[10].

The main result obtained from this project is the development of a Dual Series Resonant Converter (DSRC) incorporating switching power transistors. The power transistors used in the power stage have appropriate base control circuits that provide self-protective features against overcurrent and negligible switching losses; further, they have properties dual to those of a thyristor [3] which enable reliable operation of the devices at high voltage, current and frequency operating conditions. Moreover, a novel control strategy for the DSRC operation was designed that provided high quality sinusoidal output current with limited circulating currents in the resonant circuits.

The overall performance of the inverter prototype was evaluated using the utility-interactive inverter test facility. The inverter satisfied the overall performance requirements of the utility-interactive inverter and a total harmonic distortion of 5 % for the current harmonic and efficiency of around 85% were obtained.

The main disadvantage of the proposed control circuit design is in the use of a large number of discrete components required for the control of the DSRC. It is recommended to minimize the number of control circuit components by using a microprocessor with programmable memory. Further work is needed to accomplish this.

Another major disadvantage encountered in the operation of the DSRC with phase-shift control is the presence of large circulating currents in the resonant circuit especially at light loads. Though, the variable frequency and variable phase-shift strategy used in the present project provides an acceptable solution, it may not be the optimal solution. Due to the presence of these circulating currents, it was not possible to achieve the design capacity of 5 kW for the final prototype without unduly increasing the cost and time requirements of the project. Further work is required to search for an improvement of the operation of the DSRC under phase-shift control.

The collaboartion of the sub-contractor permitted the immediate transfer of technology from the university to an industry. The joint collaboration has been beneficial to both parties: from the university's point of view, the acquisition of a industrial prototype and from the industry's point of view, the acquisition of a new technology.

2. RESUME

Les travaux antérieurs dans le développement des convertisseurs électroniques adaptés aux systèmes photovoltaiques démontrent que l'on utilise deux types des convertisseurs en versions modifiées; on retrouve ces convertisseurs couramment dans les domaines d'entraînement des moteurs à courant continu et dans les systèmes d'alimentation de secours. Ces deux types des convertisseurs sont: onduleur à thyristor piloté par le réseau et alimenté en courant et onduleur à thyristors à commutation forcée et alimentée en tension. On choisit pour ces convertisseurs comme dispositif semiconducteur de puissance un thyristor, puisque cet élément possède les caractéristiques avantageuses telles que: tenue en tension élevée, capacité en courant élevé et prix de revient moindre. Cependant, ces convertisseurs ont besoin de composants réactifs de filtrage tels que condensateurs et inductances qui sont lourds et coûteux dans le but d'assurer un courant de sortie sinusoidal. Par ailleurs, on devra utiliser un transformateur de 60 Hz dans le but d'assurer une isolation galvanique entre la tension continue d'entrée et le réseau électrique 60 Hz de distribution.

Les progrès récents dans le développement des dispositifs électroniques de puissance mettent à notre disposition les transistors bipolaires et les transistors à effet de champ dont la tenue en tension et la capacité en courant si élevées qu'il est maintenant possible de réaliser les convertisseurs dans la gamme de petites puissances (5 à 10 kW) et voire, de moyennes puissances (10 à 100 kW). Les objectifs principaux de ce projet de recherche sont:

1. Concevoir et développer un onduleur de puissance 5 kW utilisant la technologie de pointe et fonctionnant en parallèle avec le réseau électrique de distribution.
2. Réaliser, en collaboration avec une société canadienne, un prototype industriel; évaluer les caractéristiques de performance du prototype onduleur.
3. Rendre accessible à tous les fabricants canadiens intéressés par des équipements électroniques de puissance le rapport donnant les étapes de design et les résultats d'évaluation du prototype.

Après avoir considéré les diverses structures des montages de puissance,

nous avons choisi pour ce projet la configuration d'un Double Convertisseur à Resonance Série (DCRS) à commande par variation de phase[4-7]. Le simulateur ATOSEC5 [8] permet de faire l'étude du convertisseur DCSR en régime transitoire; nous obtenons les caractéristiques statiques du convertisseur à l'aide des hypothèses simplificatrices[9]. Ces études nous ont permis de dimensionner les composants utilisés dans la réalisation du prototype. Dans une premiere phase, nous avons mis au point un prototype laboratoire d'une capacité de 1 kW. Ensuite, nous avons transmis au sous-traîtant participant tous les aspects de design et tous les dessins; il fabriqua le prototype industriel. Nous disposons dans notre laboratoire d'un banc d'essai qui permet, non seulement, de vérifier le fonctionnment d'un onduleur couplé au réseau, mais aussi, d'évaluer moyennant le systéme de saisie de données disponible, la caractéristique de performance du prototype. Remarquons que ce banc d'essai a été mis à notre disposition pour la durée de ce projet par le Conseil National de Recherches du Canada[10].

Grace à ce projet, nous avons pu réaliser un double convertisseur à résonance série comprenant les transistors de puissance en régime de commutation. La conception du circuit d'attaque de base de chacun des transistors est telle que les transistors sont dotés des caractéristiques suivantes: protection contre la sur-intensité et faibles pertes pendant les transitions ou commutations. Par ailleurs, les caractéristiques de ces dispositifs sont duales à celles d'un thyristor [3] qui permettent, donc, un fontionnement à haute tension, à fort courant et à fréquence élevée. De plus, nous avons mis au point un circuit de commande original qui permet au DCRS de fournir un courant de sortie sinusoidal tout en minimisant le courant de circulation dans les circuits résonants.

Nous avons évalué à l'aide du banc d'essai la performance globale du prototype onduleur. L'onduleur répond, d'une manière générale, aux critères de performance tels qu'exigés dans le cas d'un fonctionnement couplé au réseau. La distortion totale d'harmonique de courant est inférieure à 5 % et le rendement est autour de 85 %.

Le désavantage majeur du circuit de commande du DCRS réside dans le nombre des composants discrets requis pour sa réalisation. Nous recommandons l'utilisation d'un système de commande par microprocesseur

avec mémoire programmable dans le but de minimiser le nombre des composants électroniques discrets. Il y a lieu de faire une étude dans le but de réaliser cet objectif.

Un autre désavantage dans le fonctionnement du DCRS en mode de variation de phase est la présence de forts courants de circulation dans les circuits de résonance, surtout à faible charge. La commande nouvelle proposée utilisant la technique de variation à la fois de la fréquence et du déphasage permet de diminuer les courants de circulation. Cette solution s'avère adéquate dans le cas présent mais ne représente pas la solution optimale. Dû à la présence des forts courants de circulation, il n'était pas possible pour le prototype dévéloppé d'atteindre la capacité de 5 kW sans augmenter considérablement le temps et le coût du projet. Il y lieu d'amorcer des études supplémentaires pour améliorer davantage le fonctionnement du DCRS en mode de variation de phase.

La collaboration d'un sous-traitant dans la réalisation de ce projet a permis d' effectuer le transfert de la technologie de l'université vers l'industrie. Par ailleurs, cette collaboration a été bénéfique aux deux partenaires impliqués: l'obtention d'un prototype industriel pour l'université et l'acquisition d'une nouvelle technologie pour l'industrie.

3. INTRODUCTION:

Past work of power conditioning systems that interface between photovoltaic arrays and utility systems have concentrated on modification of two well known power conversion equipments that are commonly used in phase-controlled rectifiers for d.c. motor drives and uninterruptible power supplies. These two types of power conversion systems are the current-fed line-commutated thyristor inverter and the voltage-fed forced commutated inverter. For reasons of voltage, current and power rating availability at reasonably low cost, the thyristor has been the preferred switching device in these power conversion systems. However, the forced commutated inverter requires the use of a large quantity of power-rated auxiliary components such as: commutating thyristors, capacitors, inductors and additional control circuitry. These auxiliary components add substantially to the system cost and adversely affect the efficiency. The line-commutated inverter system has to use bulky inductive and capacitive elements with a view to filtering a large quantity of harmonic currents generated by the operation of the inverter. In addition, the operation of the system requires a large quantity of reactive power to be supplied to ensure a reasonable power factor of the utility system.

Recent advances in semiconductor switching devices have made available bipolar power transistors and power mosfet transistors, whose voltage, current and power ratings seem very promising for the development of photovoltaic power conditioning systems in the residential (5 - 10 kW) and intermediate power ranges (10 - 100 kW). The conceptual design of a 10 kW and a 100 kW power conditioner is described by Steigerwald et al of the General Electric Company[11]. Coconi et al describe a power conditioner system for photovoltaic arrays[12]. Our research team at the Université du Québec à Trois-Rivières has made an in-depth analysis of different configurations suitable for utility-interactive power conditioning systems[1]. A proof of concept design in low power rating (<1kW) has been demonstrated in a recent work by our research team[4-7]. This scheme shows considerable promise for development in the residential and intermediate power rating applications. Our research group has collaborated earlier in this development with the Electronic Section of

the Division of Electrical Engineering of the National Research Council (NRC) in Ottawa during the years 1984-1986. Our research group has developed the required facilities and acquired the necessary expertise for well over a decade in the research and development of canadian technology, thanks to various research grants that it has received from various sources.

Past work done by our group [1] has confirmed that a modular approach for the development of the power conditioning equipment will permit optimization of the parameters of the individual modules.

The fundamental building blocks or modules that comprise a photovoltaic power conditioner which is interfaced with the utility are[1]:

- active filter stage comprising a variable input dc voltage (photovoltaic array voltage) to constant output dc voltage converter;
- inverter stage comprising a constant input dc voltage to rectified sinusoidal output voltage converter;
- unfolding stage consisting of an inverter coupled to the 60 Hz ac source.

The present proposal is an innovative design of an inverter specially adapted to photovoltaic systems using state of the art techniques in transistor inverter design. The main emphasis in this design is on the substitution of solid state switching devices to accomplish functions which in the past utilized bulky inductive and capacitive elements. In addition, special consideration will be given with the object of obtaining high efficiency and high system power factor (minimization of reactive power) at reasonable cost.

The present proposal is in the category of near term product development.

4. OBJECTIVES

1. To develop a laboratory prototype of 5 kW power conditioning system based on an extensive analysis of available proof of concept designs.
Typical specifications of a utility-interactive dc to ac power conditioning system for residential applications as recommended by the Sandia National Laboratories in the U.S.A.[2] are as follows:

Capacity of the power conditioner:	4 kW
Photovoltaic array voltage, operating:	160 to 240 V dc;
Photovoltaic array voltage, nominal:	200 V dc;
Photovoltaic array voltage, transient:	0 to 400 V for transient spikes and 350 V for long term repetitive spikes
Output voltage:	120 V a.c.; + 10% or -15%
Output frequency:	60 Hz + or - 1 Hz
Efficiency:	>90% at full power >88% at half power
Utility line power factor	better than 0.95
Output ac current distortion:	< 3% for individual harmonic and < 5% for total harmonics

2. To test the developed prototype using the test facility [10] that has been made available by the Division of Electrical Engineering of the National Research Council, Ottawa to our reseach group and have the actual performance evaluated.
3. To develop a prototype in collaboration with a Canadian manufacturer of industrial electronics equipment. To make the designs available to interested canadian manufacturers of industrial electronics equipment.

The following objective as to the initial time table was set for the work schedule and appendix 1 gives the actual tasks and work schedule planned.

Time Table:

Expected starting date:

April 1, 1986

Description of tasks:

Phase 1: April 1, 1986 - March 31, 1987

1.1 Preliminary design of the individual power modules

1.2 Preliminary design of the control circuits

1.3 Assessment of and ordering required components

1.4 Fabrication of the power converter modules

1.5 Design of control electronics

1.6 Assembly of control electronics

1.7 Preliminary testing of individual power converters and control circuits

1.8 Assessment of performance of individual modules

Phase 2: April 1, 1987 - March 31, 1988

1.9 Modifications to the preliminary design

1.10 Design optimization of the total system

1.11 Laboratory testing of the power conditioning system

1.12 Study of the NRC photovoltaic array simulator

1.13 Study of the NRC photovoltaic system test facility

1.14 Evaluation of the performance of the power conditioning system

1.15 Final report

Expected completion date:

March 31, 1988

The actual date of commencement of the project was July 23,1986 and the date of completion was May 31, 1988. The detailed schedule of tasks and duration of each one of the milestones achieved are shown in appendix 2.

5. METHOD

5.1 CRITICAL EVALUATION OF POWER CIRCUIT CONFIGURATIONS

The function of the utility interface system is to convert the photovoltaic dc power to the utility compatible ac, 60 Hz. The main tasks involved are:

- selection of proper inverter configuration to convert the photovoltaic dc power to utility-quality ac 60 Hz power with maximum efficiency and minimum total harmonic distorsion.
- To convert the dc power to utility-quality ac 60 Hz power with nearly unity power factor.
- To provide Galvanic isolation between dc input source and output 60 Hz ac utility mains.

The different modules of a typical utility-interactive power conditioning system are shown in fig.1. This system consists of three building blocks:

1. A direct voltage to direct voltage converter (boost-type chopper) ensuring a direct current input source with negligible 120 Hz ripple.
2. A direct (constant) voltage to rectified sinusoidal current converter;
3. An unfolding stage current source inverter.

The components for the modules are selected with inherent characteristics that can pulse large power levels into the 60 Hz utility grid system. The modules are analyzed during initial tests for:

. rated power handling efficiency;

. transients of voltage, current and power;

. load transients;

. reliability of operation at rated power;

. economics and availability.

The circuit topologies of the four different configurations for the power conversion modules are shown in fig.2. In the first configuration, a boost-chopper, a buck-chopper and a current source inverter are used for the required power conversion. A direct voltage to direct voltage converter can be realized using any of the well-known boost-type configurations. Depending on the power levels involved, for the power converter elements, we can make use of mosfet transistors, bipolar transistors, or GTO thyristors. The use of boost-chopper at the dc input source ensures a constant current drawn from the dc source. The buck-chopper produces the required rectified-sinusoidal current output. The unfolding stage consists of a current source inverter. The galvanic isolation between the dc input source and the 60 Hz ac output is provided by a 60 Hz transformer[1].

The other three configurations shown in fig.2 make use of a high frequency ac link[11,12,4]. Configuration 2 makes use of bipolar transistors with lossless snubbers. This is well described in the literature and is the result of development by General Electric Company [11]. Configuration 3 uses bipolar transistors in a push-pull inverter configuration using well-designed high frequency magnetics and has been the result of the work done by TESLA Corporation[12]. Configuration 4 uses a novel approach for the power conversion using conventional bipolar transistors and resonant circuits[4-7]. A suitably phase-shifted control strategy permits operation of the inverter at high frequency (above 20 kHz) with negligible switching losses. The use of high frequency link ensures the necessary galvanic isolation between dc power source and ac output mains.

The use of a bulky 60 Hz transformer is the main disadvantage of

configuration 1. Further, the use of two choppers operating at high frequency requires suitable snubber circuits for high frequency operation. These contibute to additional switching losses unless bipolar transistors are replaced by mosfet transistors. Because of fast switching action, the switching losses in the mosfet converter will be smaller at switching frequency of the order of 20 kHz than the converter using bipolar transistors. Mosfet transistors for a converter of required capacity of 5 kW are more expensive than the bipolar transistors. Because of these reasons, configuration 1 is not considered for the design of our prototype.

Since, the main objective of this proposal is to arrive at an innovative design which can be eventually commercialized by Canadian manufacturers, we choose configuration 4 for the final choice of the power circuit.

5.2 POWER CIRCUIT DESIGN

The schematic diagram of the photovoltaic utility interface using Double Series Resonant Converter (DSRC) is shown in fig.3. The power circuit consists of 4 inverter-modules; each inverter-module uses two dual thyristors which have been built using two bipolar transistors (Q11 & Q13; Q12 & Q14; Q21 & Q23; Q22 & Q24) with their associated base control logic modules (BD3). Dual thyristors Q11, Q12, Q13 and Q14 constitute a bridge configuration (Bridge 1). Q11 and Q14 or Q12 and Q13 conduct simultaneously. The operation of Q11 and Q13 is complementary to each other; so also the operation of Q12 and Q14. A second bridge (Bridge 2) configuration consists of four dual thyristors: Q21, Q22, Q23 and Q24. Dual thyristors Q21 and Q24 or Q22 and Q23 conduct simultaneously. The operation of Q21 and Q23 is complementary to each other; so also the operation of dual thyristors Q22 and Q24. Each Series Resonant Converter (SRC1 or SRC2) contains 4 dual thyristor modules in bridge configuration and two series resonant circuit elements (L4-C4). The load circuit consists of a high frequency ferrite transformer, FT1, which is connected across the two bridge circuits. Let us assume that both the converters, SRC1 and SRC2 are operated at a constant frequency above the resonant frequency of the resonant circuit. Let the control of SRC2 be phase-shifted with respect to SRC1. When the phase shift, ϕ, is 0°, the input current through the high frequency ferrite transformer is the sum of the currents from the two series resonant converters: the two converters, then, operate in parallel. If the phase shift of SRC2 with respect to SRC1 is 180°, then there is no current through the primary winding of the ferrite transformer. For a phase shift between 0° and 180°, the currents from SRC1 and SRC2

are vectorially added in the load circuit. Thus it is possible to control the output current through the load circuit by controlling only the phase shift of one of the converters with respect to the other while the two converters operate at constant frequency. The secondary current of the ferrite transformer is rectified using high frequency diode rectifiers (HFR) and fed to the ac utility using a conventional transistor inverter acting as an unfolding stage which uses 4 bipolar transistors, Q31, Q32, Q33 and Q34. Transistors Q31 and Q34 conduct simultaneously during one-half period of the ac utility voltage while the transistors Q32 and Q33 conduct during the other half-period. These transistors are switched on at the zero-crossings of the utility voltage thereby obtaining unity power factor.

The DSRC operates at a frequency above the resonant frequency of the LC resonant circuit. This mode of operation of the inverter results in negligible switching losses: because each dual thyristor of the DSRC automatically conducts when the device voltage exceeds a preset positive value ($\cong$ 4 V) and the current rise is smooth. Hence, a capacitor, C3, which acts as a lossless snubber across each dual thyristor will be sufficient.

The semiconductor circuit elements used for the power circuit are the dual thyristors. The main characteristics of a dual thyristor are well described in the literature[3,6]. A schematic diagram of a dual thyristor is shown in fig.4. The dual thyristor is essentially a bipolar transistor with a suitable base control logic. The device is spontaneously turned on when its collector-emitter voltage is slightly positive. During turn-off, the sudden rise of voltage across its terminals is prevented by the presence of a capacitor CT1 across the device. The unit DVCE in fig.4 detects the voltage across the device such that for Vce < Vref, the control signal Vc

is present at the base drive for the main transistor TP1. The control logic thus ensures a spontaneous turn-on of the main transistor TP1 as soon as the antiparallel-connected diode DR1 stops conducting. The antisaturation diode DAS ensures that the main transistor is in quasi-saturated mode of operation in order that the rapid turn-off of the device is possible. Further, any tendency of the device voltage exceeding the Vref value due to a sudden increase of the collector current shuts off the base drive thereby ensuring instantaneous overcurrent protection of the device. Thus the dual thyristor is well suited for resonant converter circuits in terms of autoprotection of the device and also autoregulation of the base current. No dead time has been provided between the switching instants of the devices in the same leg. The base drive signals are isolated from the control circuit using pulse transformers. No isolated power supplies are, therefore, required. The detailed circuit diagram of a dual thyristor module is shown in fig.5.

The resonant circuit consists of high Q inductors and metallized polypropylene capacitors. These capacitors must have low inductance, low Equivalent Series Resistance (ESR) and high ripple current capability at an operating frequency in the range between 20 kHz and 40 kHz.

Design Example:

Let the specifications of the DSRC be as follows:

Power output, Pu = 5 kW

Ac utility voltage, Vu = 120 V

Ac utility frequency, fu = 60 Hz

Photovoltaic array Voltage = Vda = 200 V (nom); 160 V (min); 240 (max)

The objective is to obtain the rated power at the maximum array voltage of 240 V.

Utility line current = $I_u = P_u/V_u = 41.66$ A

Peak value of the dc link current = $\hat{I}_u = 1.414 \times I_u = 58.9$ A

We select a suitable turns ratio for the ferrite transformer in order that there would be transmission of power from the array to the utility at the minimum voltage of the array. A turns ratio of 18/24 is chosen. The peak ac utility voltage viewed from the primary terminals will be at least:

$\hat{V}_p = \hat{V}_u\ 18/24 = 127.3$ V.(Assume 135 V)

Peak primary winding current at rated power $\hat{I}_p = 1.33 \times \hat{I}_u = 80.0$ A

Note that the primary current is the sum of the two series resonant circuit currents:

$\hat{I}_p = \hat{I}_{src1} + \hat{I}_{src2}$

Hence the peak resonant circuit current at the maximum of the array voltage must be:

$\hat{I}_{scr} = \hat{I}_{src1} = \hat{I}_{src2} = \hat{I}_p/2 = 40$ A

The primary current is maximum when there is zero phase shift between the two SRC bridges and it is zero when the phase shift is 180°. Design curves for the choice of resonant circuit elements in the case of dc-dc converters are available in the literature[13]. A typical design curve that helps to choose the resonant circuit element is shown in fig. 6. We assume for our design, that the dc input voltage variation is in the range between 160 and 240 Volts. The required peak circuit resonant current is 40 A at the dc output voltage of 135 Volts. Let us also assume that the minimum operating frequency of the converter be 20 kHz. Choosing a resonant frequency of 16 kHz, the resonant circuit elements can be calculated using the method indicated in reference 13. If a maximum output of 5000 W is

desired at the maximum array voltage of 240 V dc, the required resonant circuit elements are 1.5 μF and 70 μH. However, this results in excessive device current when the phase shift is 180 °. From practical considerations such as economical and commercial availability of power semiconductor devices and low loss resonant circuit elements, we have chosen the resonant circuit elements as 0.5 μF for the resonant capacitors and 200 μH for the inductors. Using these values, we can compute the theoretical maximum power available at different dc input array voltages from the dc-ac utility interactive converter using DSRC control.

Table 1 gives the values for the theoretical maximum power at minimum, nominal and maximum array voltages. These values are calculated at the minimum operating frequency of the DSRC of 20 kHz (that is, 1.25 times the resonant frequency of the series resonant circuits).

From table 1, we can note that the theoretical maximum power output of the inverter is limited to 1800 Watts. The maximum device current is limited to 18 A which occurs at a dc input voltage of 240 V. Without altering the resonant frequency of 16 kHz, if we choose a value of 1 μF and 100 μH for the resonant circuit elements, it is possible to double the output power at all dc input voltages but at the same time double the device currents. However, if a variable frquency operation of the DSRC could be envisaged such that the minimum frequency is used at a phase shift of 0° and the maximum frequency for a phase shift of 180°, then it is possible to reduce the device peak current at phase shifts near 180°. This method of DSRC control is discussed in the next setion.

A detailed simulation study of the DSRC using a variable phase shift

control was undertaken using the ATOSEC5 simulator[8]. The detailed circuit diagram of the DSRC under study is shown in fig.7. The data for the ATOSEC5 simulator are shown in table 2. Figure 8 shows the resonant circuit currents in the two series resonant converters, the output load current and the simulated rectified utility voltage. For the purposes of the simulation study, only two half-bridge SRCs were considered .

5.3 CONTROL CIRCUIT DESIGN

The block diagram of the control scheme for the DSRC is shown in fig.9. This consists of three main modules:

1. generation of rectified sinusoidal reference waveform synchronized to the utility mains.
2. generation of required phase shift for the DSRC.
3. sensing and processing the DSRC output current for the feedback control.

The generation of rectified sinusoidal reference waveform is obtained using analog integrated circuits. A 60 Hz active filter circuit is used to obtain a clean fixed-maximum amplitude sinusoidal reference waveform. Using operational amplifiers, a rectified sinusoidal reference is obtained. At zero-crossings of the utility mains, the required logic signals for the control of the transistors in the unfolder stage are generated. A variable amplitude reference is obtained at the output of a multiplier which has two inputs: the rectified sinusoidal waveform and a dc level issuing from the variable dc output from the photovoltaic array or solar array simulator. A suitable relay logic permits operation of the inverter, if the dc array voltage is between 160 and 240 Volts. Otherwise operation of the inverter is inhibited.

The generation of the required phase shift is done using digital integrated circuits and the well-known principle of the phase-locked loop [14]. The phase-locked loop is realized using discrete integrated circuits consisting of phase error detector low-pass filter and a voltage-controlled oscillator. In order to stabilize the phase-locked loop, a loop gain compensation

scheme [14] is used which permits a stable operation of the phase-shift control under constant or variable frequency operation of the inverter. The addition of another voltage-controlled oscillator VCO2 permits the operation of the phase-locked loop at variable frequency between 18 kHz and 20 kHz. As the phase shift is varied from 0° to 180°, the frequency is varied from a minimum of 18 kHz to a maximum of 20 kHz. In order not to distort the generated sinusoidal waveform at the output of the DSRC, a complex function generator must be used for the unit identified as NK. As a first approximation, we have used a constant gain for this circuit. The sinudoidal output from the DSRC is maintained due to the feedback loop. The outputs from this module give the required logic signals for the base drive units of the dual thyristor modules. The output from VCO2 controls one of the SRC bridges which is not phase-shifted. The output from VCO1 controls the other SRC bridge which is phase-modulated following a rectified sinusoidal waveform of 60 Hz.

The third module of the DSRC scheme does the current sensing and processing for the feedback control. A Hall effect current sensor module is used for load current detection at the primary of the ferrite transformer; the load current sensed is rectified and adequately filtered using operational amplifiers. A proportional-integral controller is used for the current controller. The output of the current controller provides the necessary input signal to the phase-shift control unit of the phase-locked loop. The detailed DSRC control circuit is shown in fig.10. The details of the current sensor unit are shown in fig.11.

A relay logic module determines the operating sequence of the converter unit. The logic power supplies for the relay logic unit are obtained from the utility mains. When dc power supply is available for the logic circuits,

it is assumed that the utility line (120 V, 60 Hz) is available. the converter will be in stand-by mode until the photovoltaic array voltage attains a minimum of 160 Volts. The start-up of the converter unit is possible only when the dc array voltage is in the range between 160 and 240 Volts. During normal operation, power from the photovoltaic array is transferred as a function of the available dc input voltage. The dc voltage is continuously measured and monitored if it is within the specified range between 160 and 240 Volts. The ac output current is also continuously monitored if there are any abnormal ac or dc components. Shunt SH1 measures the dc source current which can be used for the control of the converter in any special mode such as maximum power tracking. This mode of operation is not used in our prototype.

The shut-down of the converter is initiated when any one of the following conditions prevail:

- under-voltage or overvoltage at the dc input
- excessive ac component or dc component at the ac output of the inverter. Following a shut-down, the start-up sequence will automatically follow provided all required conditions are fulfilled. The detailed circuit diagram of the relay logic unit is shown in fig.12.

Appendix 3 gives the complete details of the control and power circuits and the list of components used for the final prototype.

5.4 PACKAGING

The packaging details of the prototype are shown in fig. 13. Care is taken to layout power circuit components without interaction with the control circuits. The semiconductor devices and their base driver BD3 circuits are integrated in the same printed circuit module in order to minimize turn-on time and turn-off time of the semiconductor switches. Shielded wires have been used for the control signals from the DSRC control logic unit; further, the DSRC control provides a current signal input to the BD3 logic which in turn minimizes the maloperation of the dual thyristors due to spurious signals.

Figure 13 shows the complete layout of the prototype. Photograph 1 shows the complete prototype.

6. TEST RESULTS

The prototype was tested using the Array Simulator Test Facility developed by the National Research Council, Canada[10]. The test facility contains a solar array simulator, ac and dc voltage, current and power transducers and a data acquisition system that permits on-line evaluation of the total harmonic distortion of the utility voltage and current waveforms. It permits also the calculation of the total dc-ac efficiency of the inverter. Appendix 4 gives the details of the test facility.

For testing the utility-interactive inverter, the parameters of the control circuit were pre-adjusted to provide the maximum power corresponding to the array voltage. As the array voltage is increased in the permissible voltage range between 160 and 240 Volts, the power transfer from the solar array simulator to the utility is proportionately increased. The solar array voltage is continuously monitored to provide the necessary current reference input to the control circuit. Due to undue circulating currents in the resonant circuits, it was necessary to limit the array voltage to a maximum of 200 Volts. The maximum power transferred to the utility was 800 Watts with a total harmonic distortion of 5% at an efficiency of 85%. Photograph 2 gives a typical utility-current waveform at a power output of 640 Watts at an array voltage of 160 Volts.

Nearly unity displacement factor (power factor) was obtained.

7. DISCUSSION OF RESULTS

The test results obtained from the prototype show that large circulating currents limit the deliverable power output particularly when the series resonant converters are under phase control. A sinusoidal modulation of the phase shift between the series resonant converters provides the necessary sinusoidal current output. However, this results in the under utilization of the converters. As an example, the components of the prototype can be easily configured to build a dc-dc converter; this dc-dc converter provided an output of 5 kW at 240 Volts. However, the same components when used to provide a sinusoidal current output, the power rating is diminished by a factor of 4. In addition to this, due to the presence of large circulating currents in the resonant circuits, the input dc voltage has to be limited to 200 Volts and the power output is further reduced to give an output power of only 800 Watts. Although, a variable frequency strategy under variable phase-shift modulation helps to reduce the resonant circuit currents, it is not possible to increase substantially the power output. Further work is needed to research new topologies for the dc-ac inverter that maximize the use of circuit components and provide utility-quality power.

8. FIGURES AND TABLES

Figure 1: Scheme 1-Configuration 1 Using Boost-Buck and Current Source Converters

Figure 2: Circuit Topologies Used for the Realization of Power Conditioning Equipment.

Figure 3: Double Series Resonant Converter (DSRC)

Figure 4: Schematic Diagram of a Dual Thyristor

Figure 5: Dual Thyristor Module

Figure 6: Design Curves for Series Resonant Converter

Figure 7: Circuit Diagram for DSRC - Simulation Study Using ATOSEC5 Simulator

Figure 8: ATOSEC5 Simulation Results for DSRC with Sinusoidal Phase Modulation

Figure 9: Control Scheme for DSRC

Figure 10: DSRC Control Logic Circuit - Variable Phase Shift, Variable Frequency Control

Figure 11: Current Sensor CS1

Figure 12: Relay Logic Circuit

Figure 13: Packaging Details

Photo 1: View of the Prototype

Photo 2: Typical utility-line current and voltage waveforms

Table 1: Theoretical Maximum Values of Power Output from DSRC

Table 2: Data for ATOSEC5 Simulator - DSRC with Sinusoidal Phase Modulation

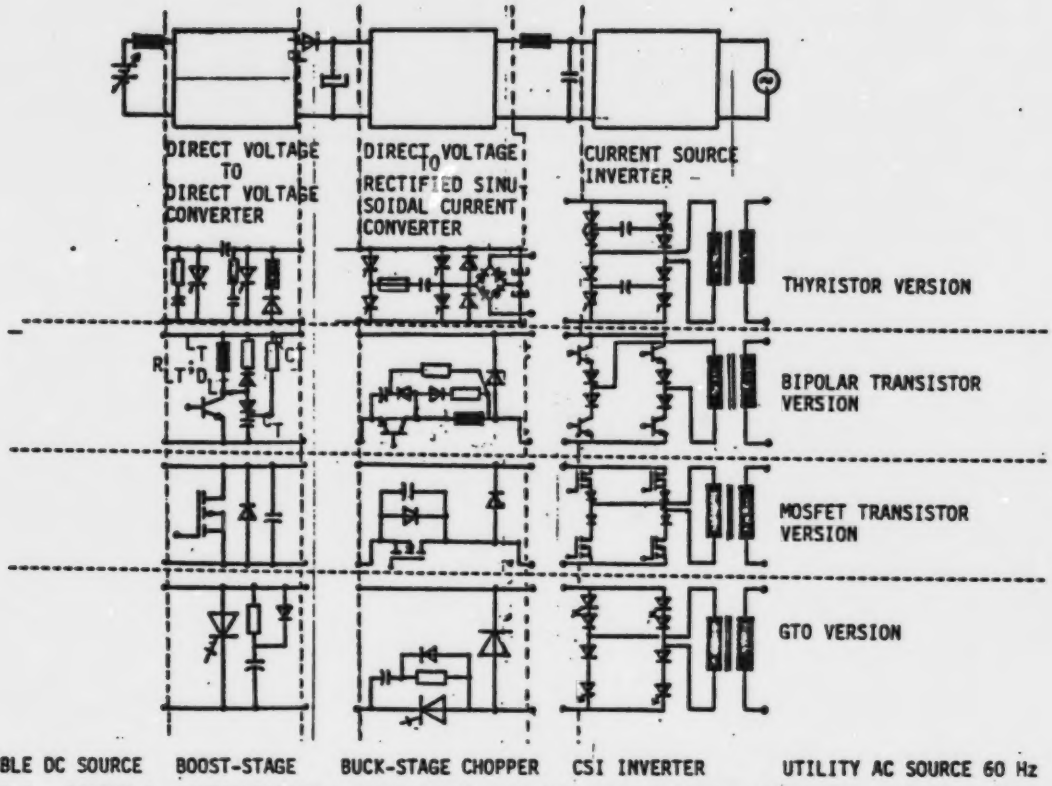

FIGURE 1: SCHEME 1- CONFIGURATION 1 USING BOOST-BUCK AND CURRENT SOURCE CONVERTERS WITH 60 Hz TRANSFORMER

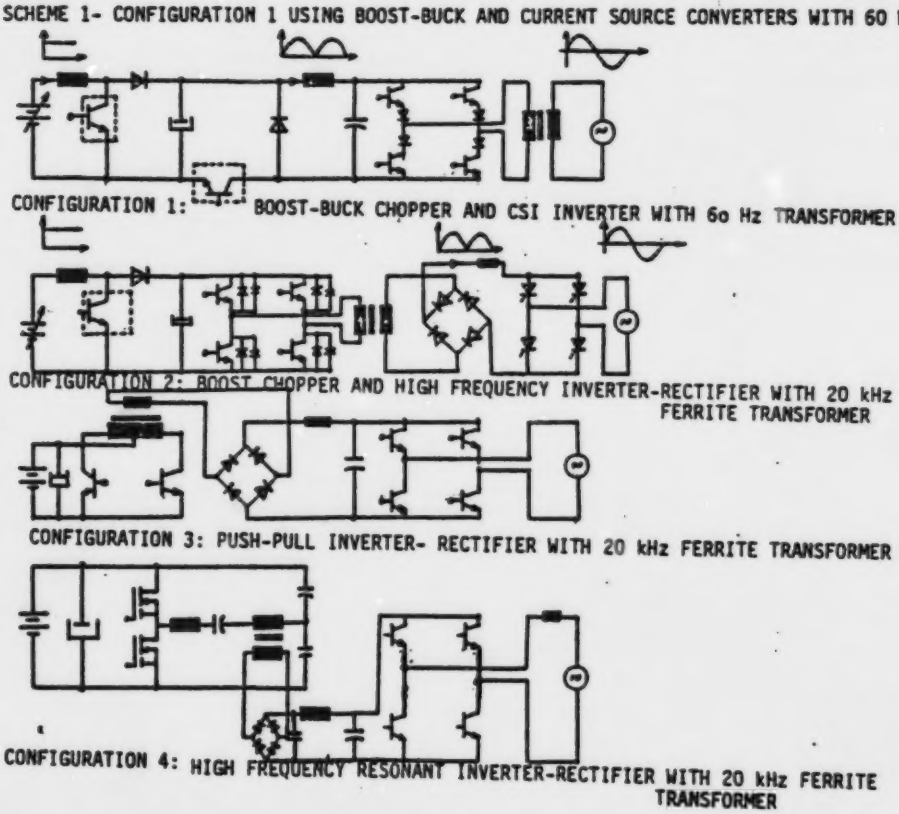

FIGURE 2: CIRCUIT TOPOLOGIES USED FOR THE REALISATION OF POWER CONDITIONING EQUIPMENT

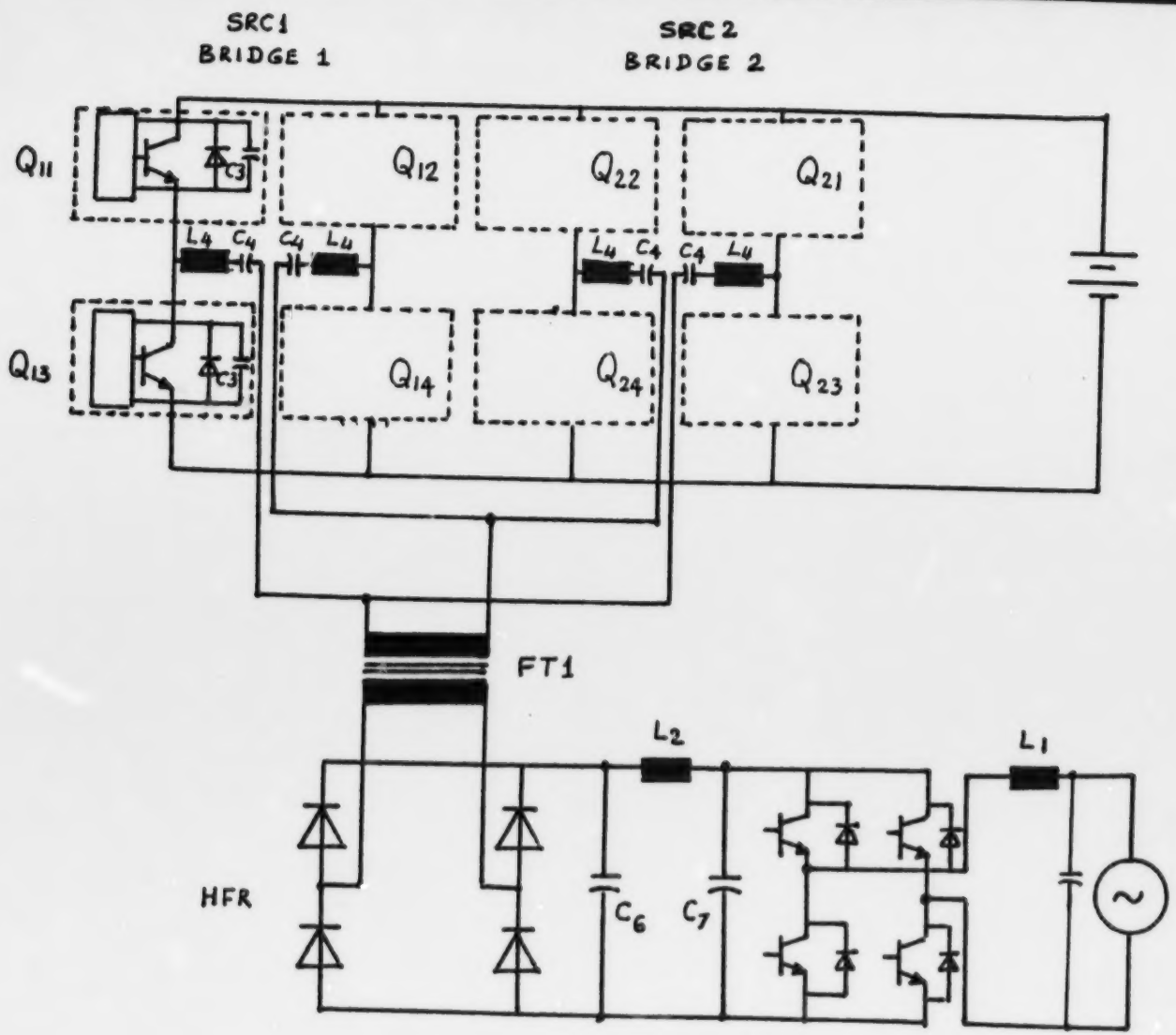

FIGURE 3 : DOUBLE SREIES RESONANT CONVERTER (DSRC)

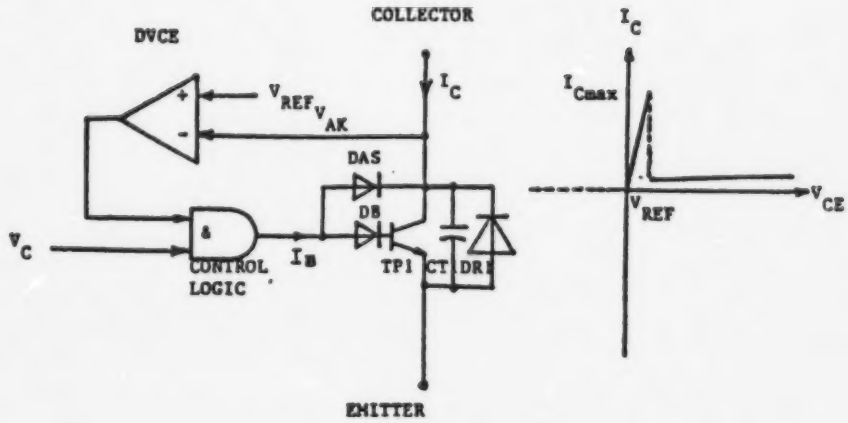

FIGURE 4: SCHEMATIC DIAGRAM OF A DUAL THYRISTOR

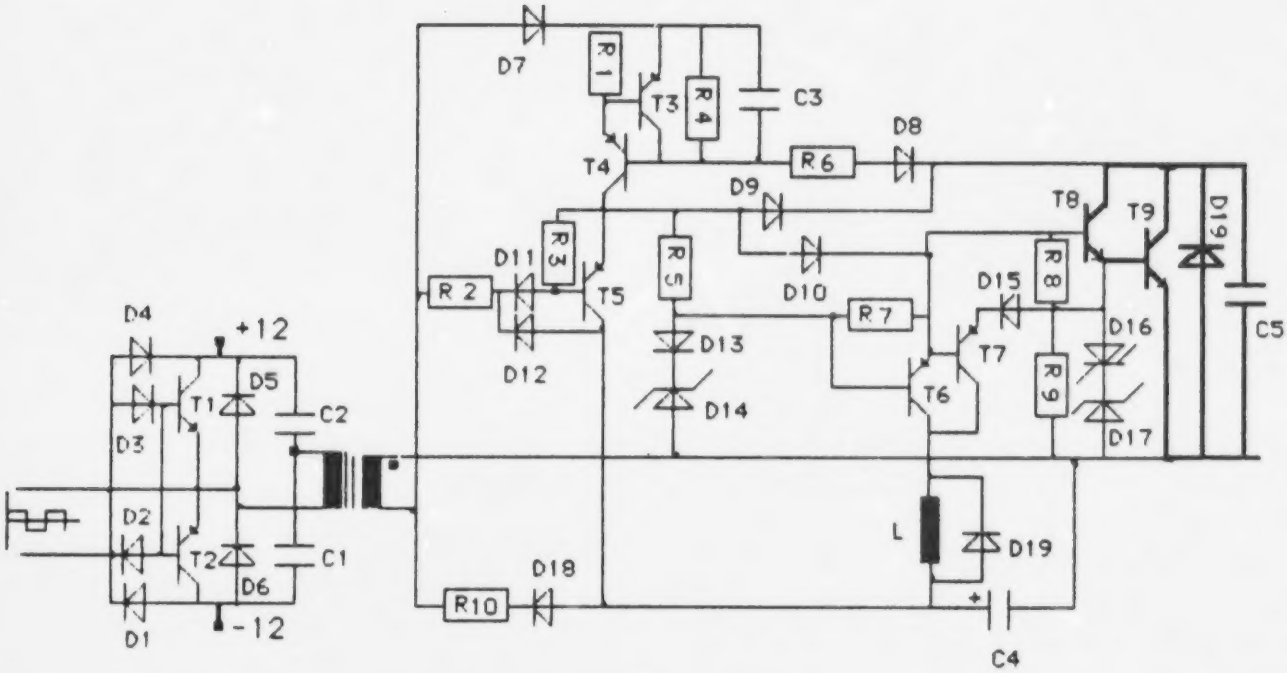

D1 . 1N4934	R1 . 1E0	C1 . 100 UF,25V	T1 : D44H11
D2 . 1N4934	R2 . 47E0	C2 . 100UF,25V	T2 : D45H11
D3 .1N4934	R3 : 470 E0	C3 : 4.7NF, 100V	T3 . 2N2905A
D4 .1N4934	R4 : 100 E0	C4 . 6.8UF,160V	T4 : D45H11
D5 .1N3880	R5 : 82 E0	C5 . 22NF, 600V	T5 . 2N5322
D6 .1N3880	R6 : 47 E0		T6. D45H11
D7 : 1N4935	R8 . 47 E0		T7 : D45H11
D8 . 1N4947	R9 : 22 E0		T8 : 2N6547
D9 : 1N4947			T9 : MJ10016
D10: 1N4935			
D11: 1N4950			
D12. 1N4950			
D13: 1N4935			
D14 :BZX85C5V			
D15. 1N4935			
D16 :BZW045V8			
D17 BZW045V8			
D18. 1N4935			
D19. 1N4935			

FIGURE 5: DUAL THYRISTOR MODULE

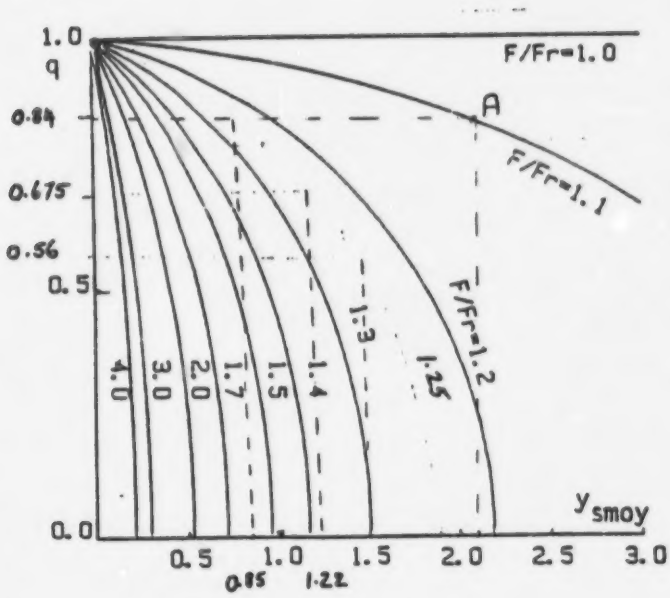

FIGURE 6: DESIGN CURVES FOR SERIES RESONANT CONVERTER

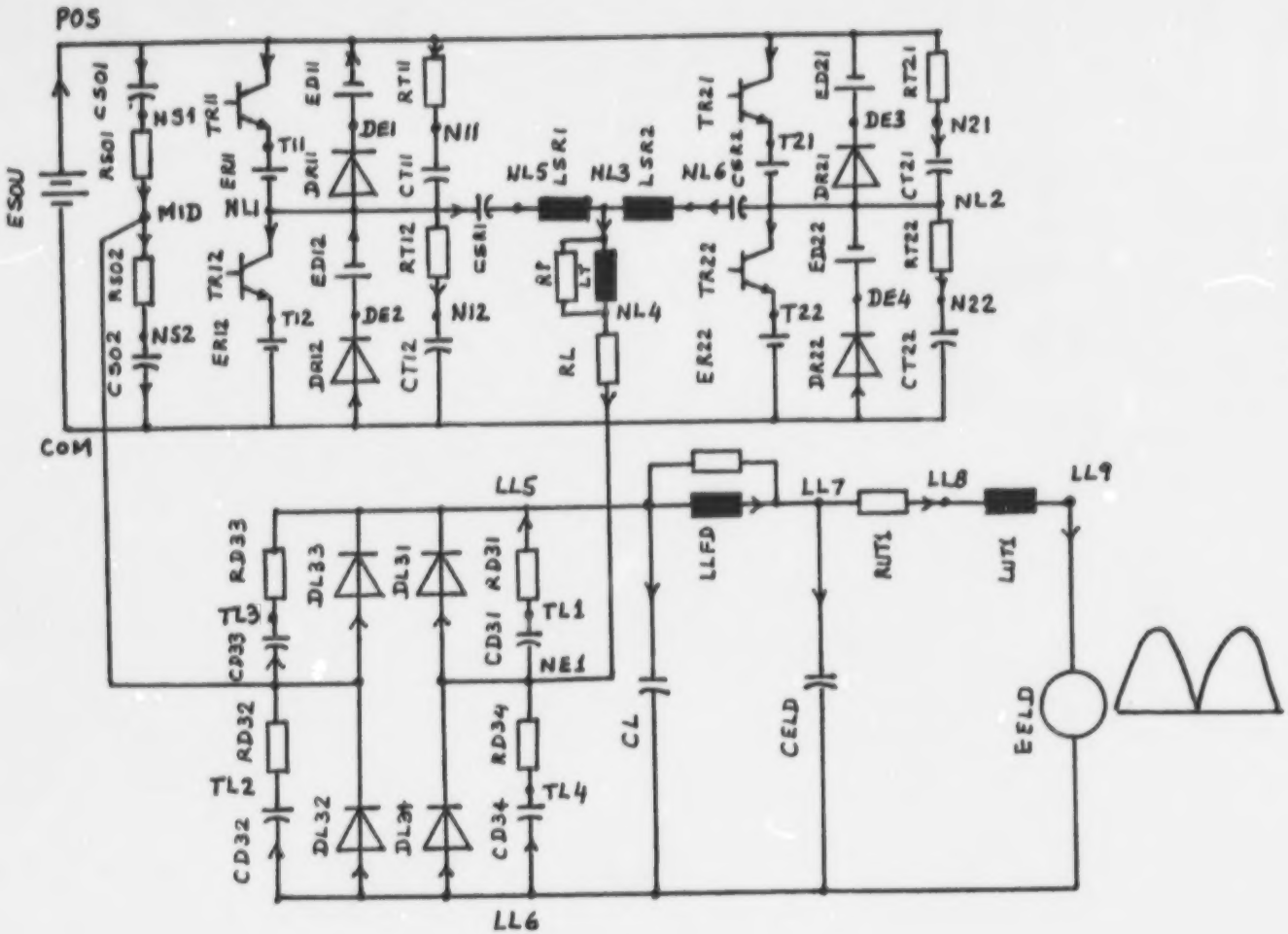

FIGURE 7: CIRCUIT DIAGRAM FOR DSRC - SIMULATION STUDY USING ATOSEC5 SIMULATOR

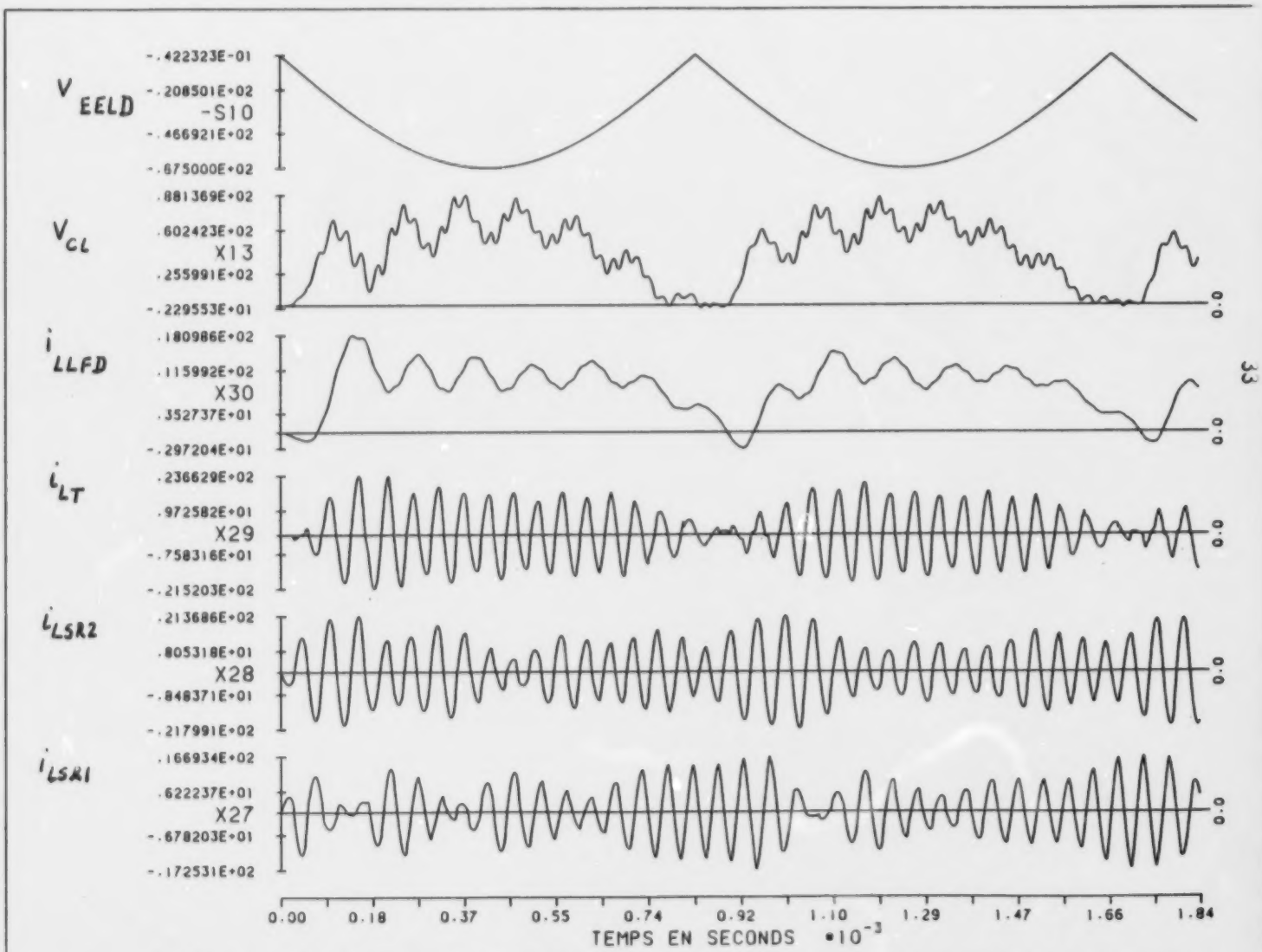

FIGURE 8: ATOSEC5 SIMULATION RESULTS DSRC WITH SINUSOIDAL PHASE MODULATION

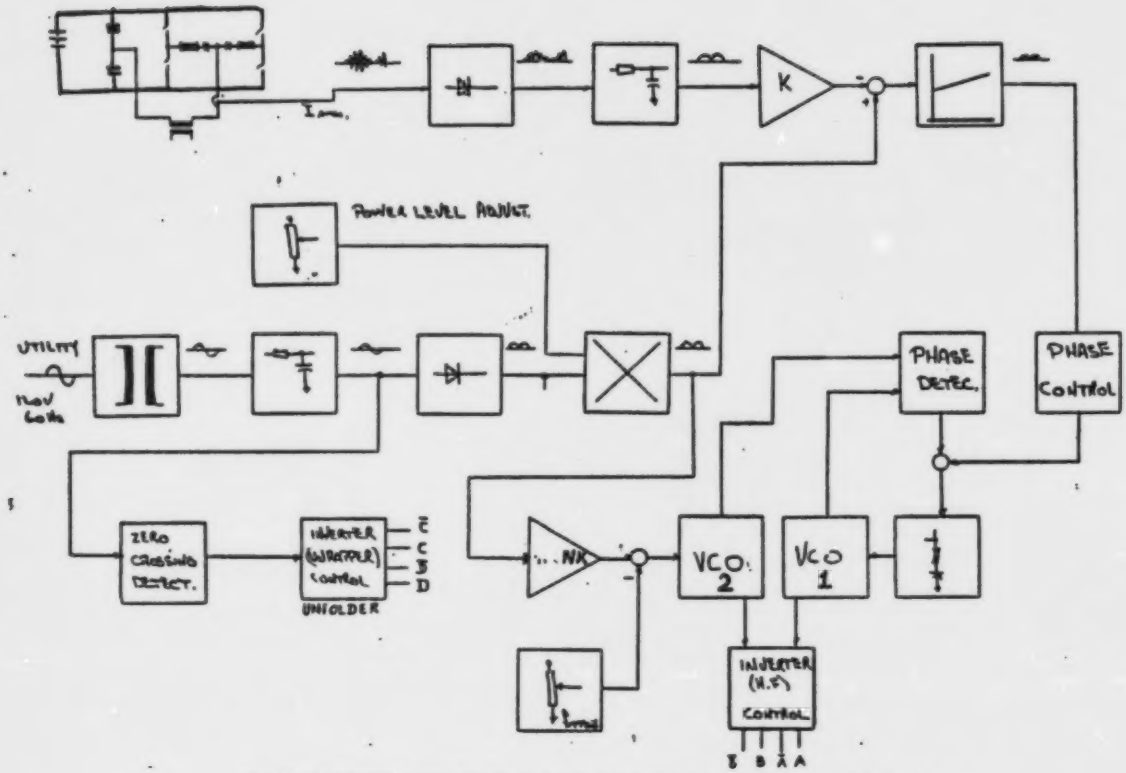

VARIABLE FREQUENCY AND VARIABLE PHASE SHIFT CONTROL OF DSRC - SCHEME 1

FIGURE 9: CONTROL SCHEME FOR DSRC

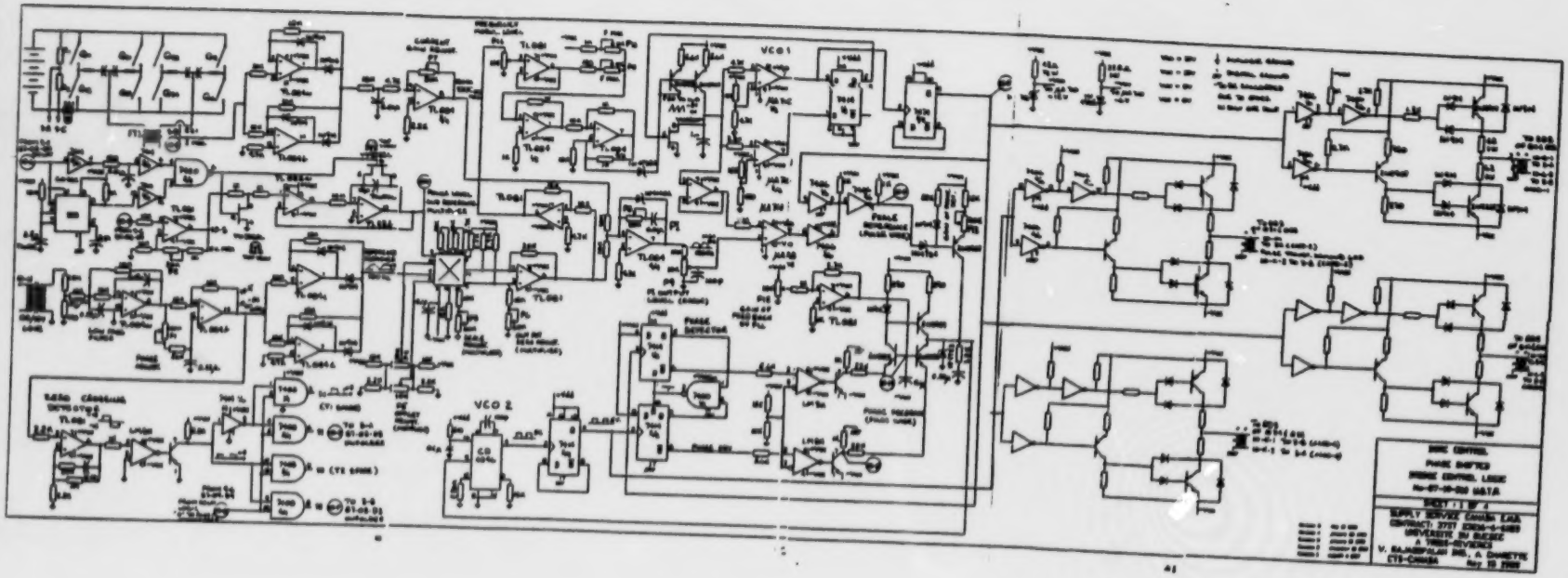

FIGURE 10: DSRC CONTROL LOGIC CIRCUIT - VARIABLE PHASE SHIFT, VARIABLE FREQUENCY CONTROL

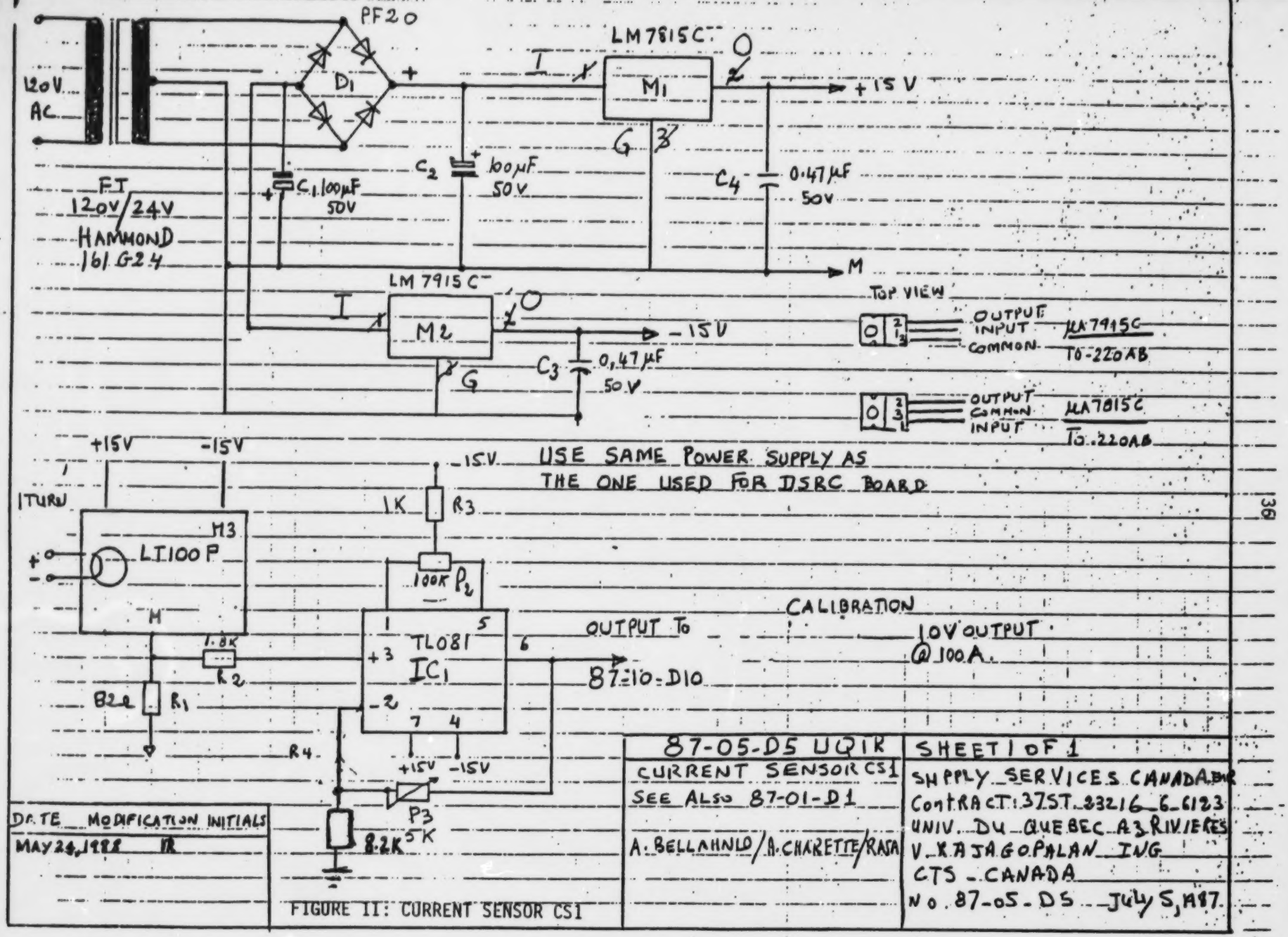

FIGURE II: CURRENT SENSOR CS1

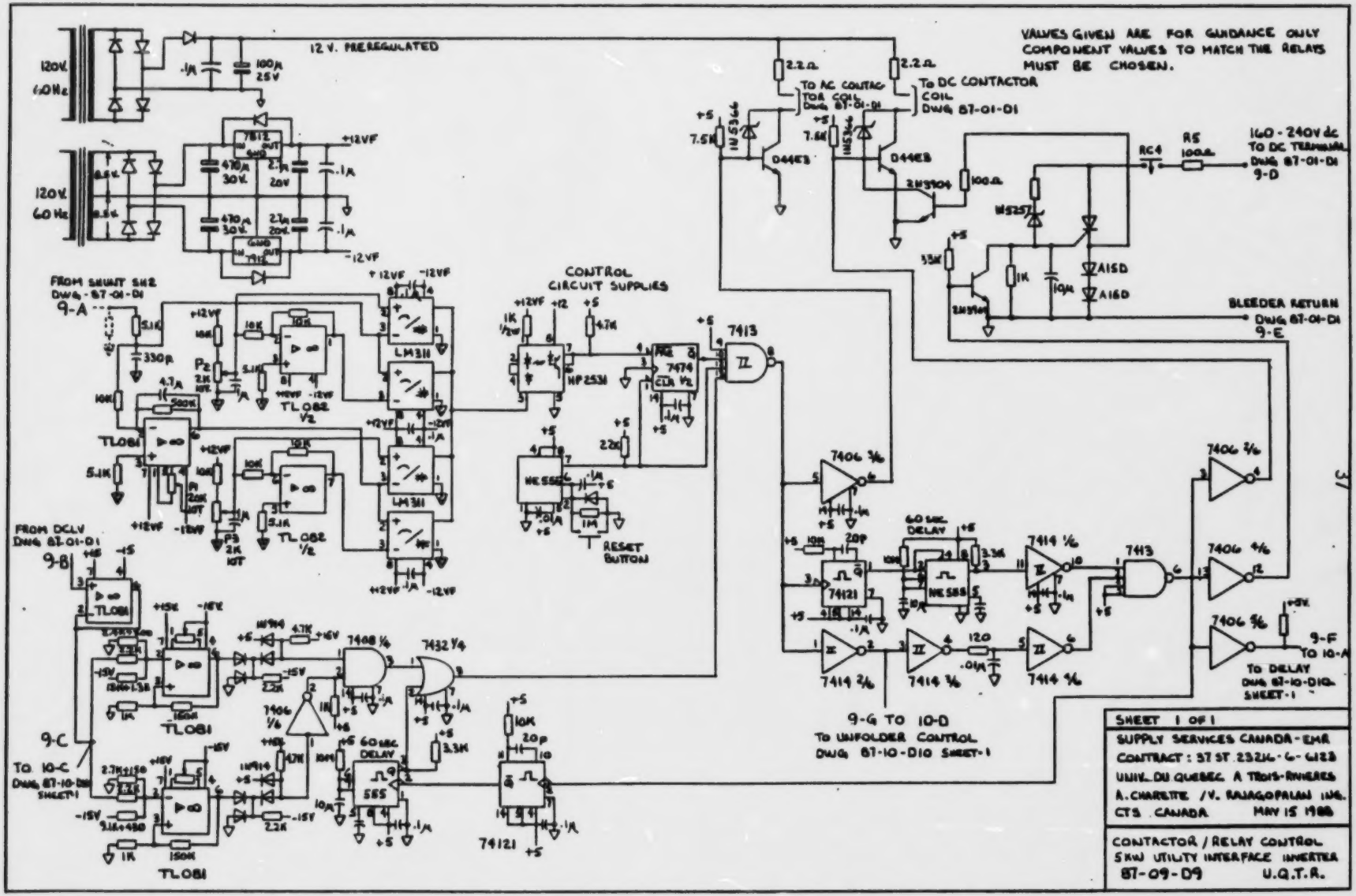

FIGURE 12: RELAY LOGIC CIRCUIT

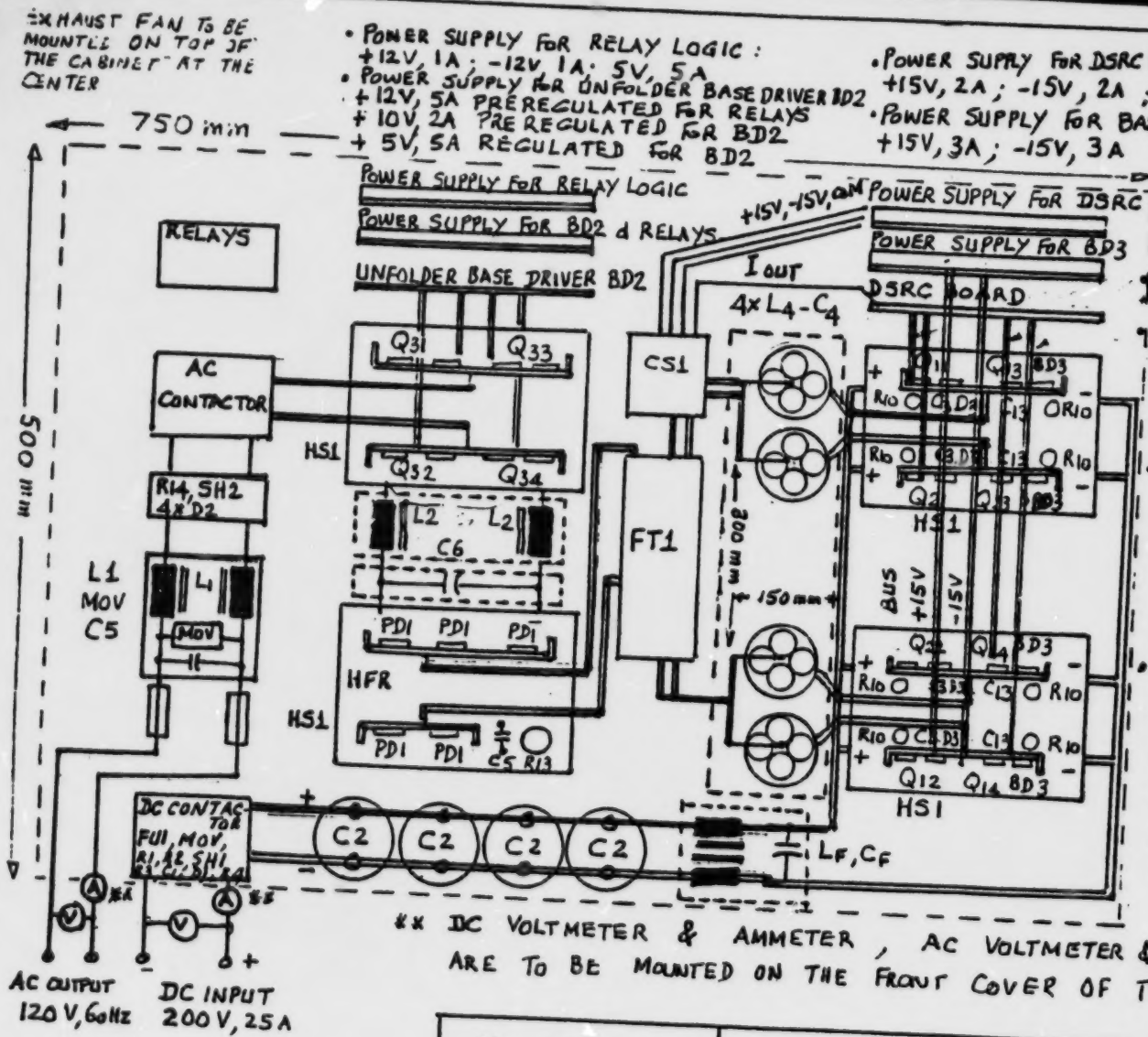

APPROXIMATE OVERALL DIMENSIONS OF THE PROTOTYPE

750 mm x 500 mm x 450 mm

MODIFICATIONS:	DESIGNATION	SUPPLY SERVICES - EMR CANADA
	PACKAGING FOR PROTOTYPE DRAWING 88-12-D12 UQTR DRAWN: V. RAJAGOPALAN DATE : MAY 25, 1988 FIGURE 13:- PACKAGING DETAILS	CONTRACT: 37ST. 23216-6-6123 UNIVERSITE DU QUEBEC À 3 RIVIERES GROUPE : ELECTRONIQUE DE PUISSANCE V. RAJAGOPALAN ING.

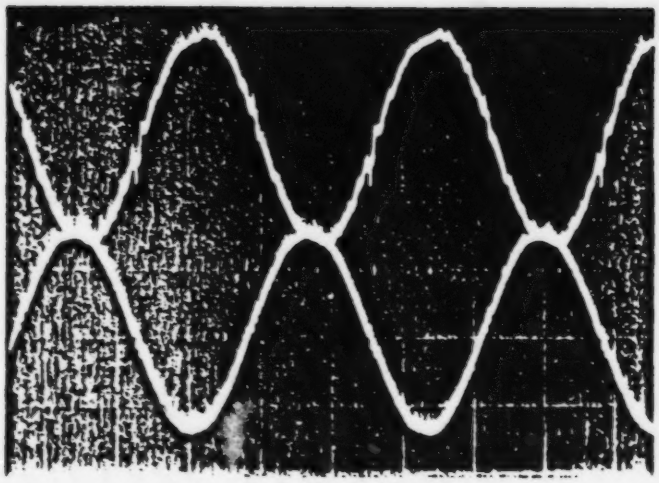

UTILITY LINE CURRENT
20 A PEAK TO PEAK

UTILITY LINE VOLTAGE
40 V PEAK TO PEAK

PHOTOGRAPH 1: EXPERIMENTAL WAVEFORMS OF UTILITY LINE CURRENT AND UTILITY VOLTAGE

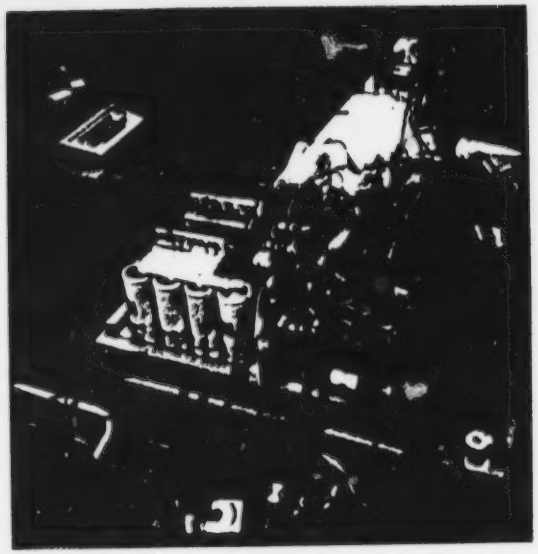

PROTOTYPE 1

PROTOTYPE 2

PHOTO 2: EXPERIMENTAL PROTOTYPES

Table 1: Theoretical Maximum Values of Power Output from DSRC

Resonant circuit inductor, L4 = 200 μH;

Resonant circuit capacitor, C4 = 0.5 μF

Vda(V)	$\hat{V}$p(V)	Îp(A)@Ø=0°	Îs(A)@Ø=0°	Iu(A)	Pu(W)	Îsrc(A)@Ø=180°
160	135.00	10.7	8.00	5.70	680	12
200	135.00	19.2	14.40	10.0	1200	15
240	135.00	28.3	21.20	15.0	1800	18

TABLE 2: DATA FOR ATOSEC5 SIMULATOR - DSRC WITH SINUSOIDAL PHASE MODULATION

```
$
$    DATA MODIFIED ON MAY 31, 1988
$ EX515 MODULATION SINUSOIDALE: 600 HZ
$
$ SIMULATION STUDY OF A DSRC: DECEMBER 17, 1987
$ EXAMPLE 5.15 : DUAL SERIES RESONANT CONVERTER
$                PESC87 UPDATED: 87-03-18
$
E,ESOU,COM,POS
C,CSO1,POS,NS1,20,MU
R,RSO1,NS1,MID,0.1
R,RSO2,MID,NS2,0.1
C,CSO2,NS2,COM,20,MU
T,TR11,POS,T11,8,MU
E,ER11,T11,NL1
T,TR12,NL1,T12,8,MU
E,ER12,T12,COM
D,DR11,NL1,DE1,2,MU
E,ED11,DE1,POS
D,DR12,COM,DE2,2,MU
E,ED12,DE2,NL1
R,RT11,POS,N11,0.1
C,CT11,N11,NL1,0.02,MU
C,CT12,N12,COM,0.02,MU
R,RT12,NL1,N12,0.1
T,TR21,POS,T21,8,MU
E,ER21,T21,NL2
T,TR22,NL2,T22,8,MU
E,ER22,T22,COM
D,DR21,NL2,DE3,2,MU
E,ED21,DE3,POS
D,DR22,COM,DE4,2,MU
E,ED22,DE4,NL2
R,RT21,POS,N21,0.1
C,CT21,N21,NL2,0.02,MU
R,RT22,NL2,N22,0.1
C,CT22,N22,COM,0.02,MU
C,CSR1,NL1,NL5,0.5,MU
C,CSR2,NL2,NL6,0.5,MU
L,LSR1,NL5,NL3,200,MU
L,LSR2,NL6,NL3,200,MU
L,LT,NL3,NL4,0.1,MU
R,RF,NL3,NL4,1111
R,RL,NL4,NE1,0.1
D,DL31,NE1,LL5,2,MU
C,CD31,NE1,TL1,0.01,MU
R,RD31,TL1,LL5,0.1
D,DL32,LL6,MID,2,MU
C,CD32,LL6,TL2,0.01,MU
R,RD32,TL2,MID,0.1
D,DL33,MID,LL5,2,MU
C,CD33,MID,TL3,0.01,MU
R,RD33,TL3,LL5,0.1
D,DL34,LL6,NE1,2,MU
C,CD34,LL6,TL4,0.01,MU
R,RD34,TL4,NE1,0.1
C,CL,LL5,LL6,5,MU
L,LLFD,LL5,LL7,1,MI
R,RLFD,LL5,LL7,1111
C,CELD,LL7,LL6,1,MU
R,RUT1,LL7,LL8,0.1
L,LUT1,LL8,LL9,1   ,MU
E,EELD,LL9,LL6
```

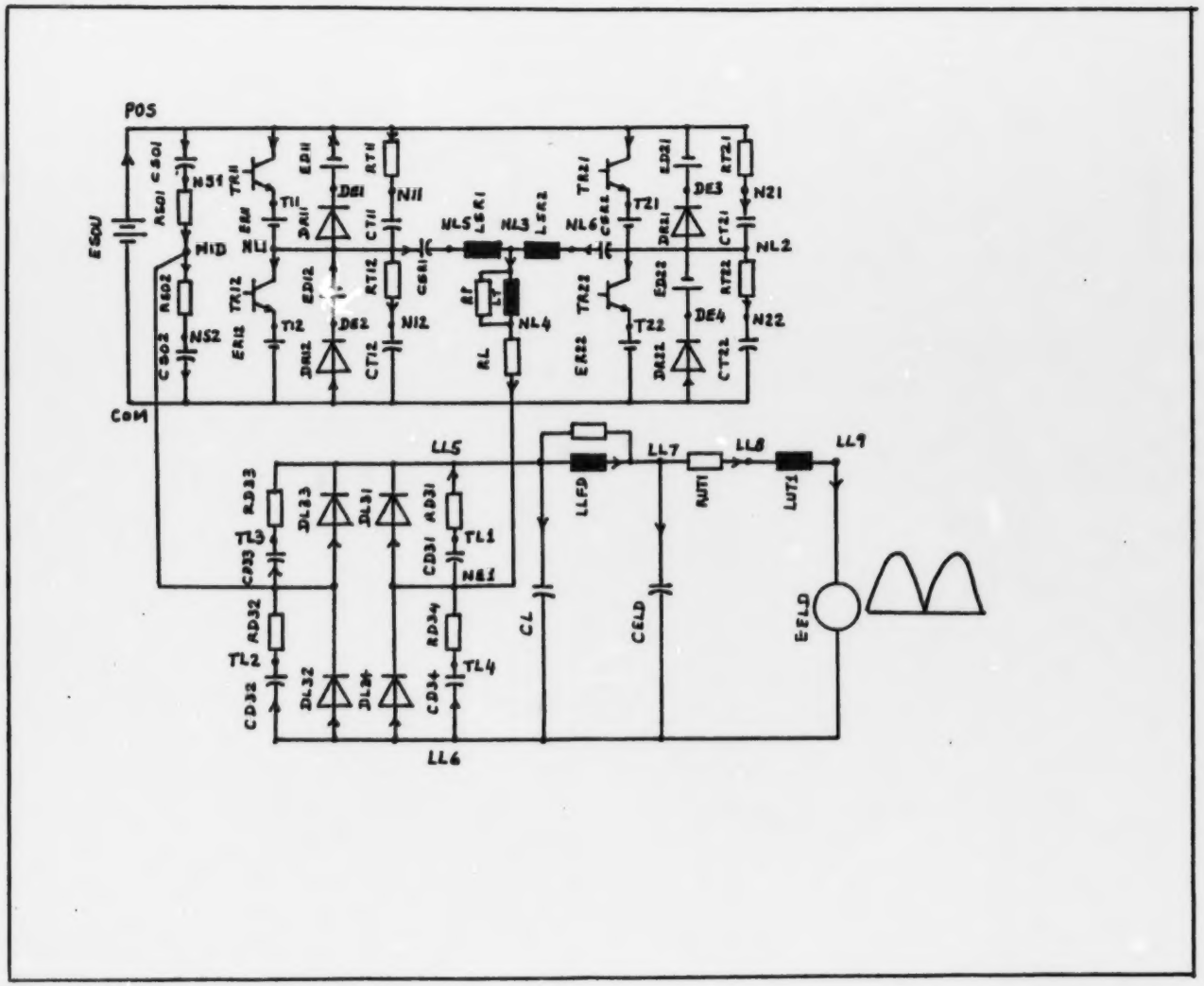

```
*
2,CS01,100,CS02,100
0
0
12
1,-100,0,0,0,0
1,1.5,0,0,0,0
1,1.5,0,0,0,0
1,2.5,0,0,0,0
1,2.5,0,0,0,0
1,1.5,0,0,0,0
1,1.5,0,0,0,0
1,2.5,0,0,0,0
1,2.5,0,0,0,0
7,67.5,600,0,0,0
3,100,20E03,0,0,0
3,100,20E03,-180,0,0
1,0,0,0,0,0
1,0,0,0,0,0
8,100,20E03,-180,0,0
8,100,20E03,-0,0,0
1,0,0,0,0,0
1,0,0,0,0,0
1,0,0,0,0,0
1,0,0,0,0,0
1,0,0,0,0,0
1,0,0,0,0,0
0,0,0,0,0,0,0,0,0,0,0,0
-0.1,-0.1,-0.1,-0.1,-0.1
-0.1,-0.1,-0.1,-0.1,-0.1
-0.1,-0.1
2,2,2,2,2
2,2,2,2,2
2,2
180,180,0,0,180
180,0,0,0,0
0,0
0,0,0,0,0
0,0,0,0,0
0,0
0.5E-03,1.0E-06,0,0,0,3,1028,0
5,0,0,0,0,0,0,0,0
0,0,0,0,0,0,0,33,0
0,0,0.9,5,0,0,0,0,0
```

9. Conclusions

This project has helped us to research and develop the state of the art utility-interactive inverter using double series resonant converters. Extensive simulation studies on the configutaion chosen for the prototype development showed great promise. However, the experimental prototype could not deliver the required output power due to practical difficulties such as non-availability of high performance semiconductor devices at reasonable cost.

The development of the experimental prototype with the assistance of a Canadian company was quite rewarding. However, the physical separation of the sub-contractor's plant and the University in terms of distance resulted in undue delays in the transfer of components and exchange of technical information during the critical periods of the prototype development. Further, there were undue delays in the procurement of high performance and industrial grade semiconductor devices, electromagnetic and electrostatic components. Delivery times of 12 - 26 weeks for the procurement of some of the components hampered normal progress of the work schedule.

Although, the original objectives set forth were not obtained in terms of the expected power output, the knowledge gained during the course of this project will serve as useful guidelines for the development of future topologies and configurations better adapted to photovoltaic systems. The field of resonant converters is relatively new and important which will find applications in the development of dc-dc converters in many industrial applications such as power supplies for X-ray, laser and welding equipments and power supplies in space applications. The technology

developed during the course of this project should be useful for furthering research in these areas.

10. RECOMMENDATIONS

Resulting from the experience obtained during the course of this project, the following recommendations are made:

1. Further research into new topologies should be undertaken with a view to increase the utility-quality power output from the converter.

2. This further research could be undertaken by our research group using the prototype developed. It is recommended that the prototype be made available to our reserach group.

3. The unique experience gained during the term of this project will be helpful to our research team to further research in the area of resonant converters.

4. In order to maximize the efficiency of co-operation between industry and university, efforts should be put in to encourage participation of a regional industry.

11 REFERENCES

[1] V. Rajagopalan, K. Al Haddad, and J. Ayer, "Innovative Utility-Interactive D.C. to A.C. Power Conditioning System", IEEE IECON'85 Conference Record, San Franscisco, Nov.1985, 85 CH 2160-0, pp.471-476.

[2] T.M. Galloway, J.E. Leeman, and T.S. Key, "Comparison of Designs for Photovoltaic Power Conditioners", Sandia Report SAND86-0184, Sandia National Laboratories, Albuquerque, New Mexico 87 185, U.S.A., July 1986 (38 pp)

[3] H. Foch and J. Roux, " Convertisseurs statiques d'énergie à semiconducteurs ", Patents ANVAR France No.7832428, West Germany No.P29452457, Great Britain N0.7939217, USA No.093106, Italy N0.83487A/79

[4] V. Rajagopalan, K.S. Rajashekara and J. Ayer, " Photovoltaic Utility-Inverter Systems", Solar '87, Portland, Oregon, U.S.A., July 1987, pp.171-175.

[5] V. Rajagopalan, K.S. Rajashekara and K. Al Haddad, "Analysis and Design of a Dual Series Resonant Converter for Utility Interface", IEEE Power Electronics Specialists' Conference, Blacksburg, VA., U.S.A., June 1987, pp.37-45.

[6] K.S. Rajashekara, A. Charette, K. Al Haddad and V. Rajagopalan, "Analysis and Design of a Dual Series Resonant Converter for Utility Interface", IEEE Industry Applications Society Annual Conference, Atlanta, Georgia, U.S.A., Oct. 1987, pp.711-716.

[7] A. Charette, K. Al Haddad, R. Simard and V. Rajagopalan, "Variable Frequency and Variable Phase Shift Control of Dual Series Resonant Converter for Utility Interface", IEEE IECON'88 Annual Conference, (Paper sent for Publication), Singapore, Oct.1988

[8] V. Rajagopalan, "Computer-Aided Analysis of Power Electronic Systems", Marcel Dekker Inc., New York, U.S.A., April 1987, 541 pp.

[9] P. Savary, M. Nakaoka and T. Maruhashi, "A High-Frequency Resonant Inverter Using Current-Vector Control Scheme and Its Performance Evaluations", IEEE Transactions on Industrial Electronics, Vol.IE-34, No.2, May 1987, pp.247-256.

[10] J. Ayer, "A System for Static and Dynamic Performance Testing of Terrestrial Photovoltaic Power Conditioners", National research Council Canada, Division of Electrical Engineering, Report NRCC No.24749, April 1985, 18 pp.

[11] R.L. Steigerwald, B.K. Bose and P.M. Szczesny, "Design and Contribution of an Advanced Power Conditioning Subsystem for Small Photovoltaic Applications", Contractor Report SAND83-7037, Sandia National Laboratories, Albuquerque, NM, 87185,U.S.A., March 1985.

[12] A. Cocconi, S. Cuk, R.D. Middlebrook and T.S. Key, "Design and Development of a 4-kW/20-kHz dc-Isolated Power Conditioner for Utility-Interactive Photovoltaic Applications", Sandia Report SAND87-0353.UC-63, Sandia National Laboratories, Albuquerque, NM, 87185, U.S.A.,pp.73

[13] K. Al Haddad, "Etude des différentes stratégies de contrôle d'un convertisseur à résonance- Application à l'alimentation haute tension d'un laser CO2", Thèse de Doctorat, Institut National Polytechnique de Toulouse, 25 février 1988, Chapitre 1,p.37.

[14] R. Yeager, "Loop Gain Compensation in Phase-Locked Loops", RCA Review, Vol. 47, March 1986, pp.78-87.

12. APPENDICES

Appendix 1: Planned Tasks and Work Schedule

Appendix 2: Schedule of Tasks and Milestones Achieved

Appendix 3: Power and Control Circuit Details

Appendix 4: Solar Array Test Facility

Appendix 5: Copies of Publication

APPENDIX 1

Time Table:

DESCRIPTION OF WORK TASK:

Phase 1: contract commencement date - March 31, 1987

1.1 Preliminary design of the individual power modules

1.2 Preliminary design of the control circuits

1.3 Assessment of and ordering required components

1.4 Fabrication of the power converter modules

1.5 Design of control electronics

1.6 Assembly of control electronics

1.7 Preliminary testing of individual power convertars and control circuits

ASSESSMENT OF PERFORMANCE OF INDIVIDUAL MODULES

Phase 2: April 1, 1987 - March 31, 1988

2.1 Modifications to the preliminary design

2.2 Design optimization of the total system

2.3 Laboratory testing of the power conditioning system

2.4 Study of the NRC photovoltaic array simulator

2.5 Study of the NRC photovoltaic system test facility

2.6 Evaluation of the performance of the power conditioning system

2.7 Final report

APPENDIX 2

Supply and Services Canada / Approvisionnements et Services Canada

DSS-MAS 0143-2 (4/81)

CONTRACT PLAN AND REPORT FORM — FORMULE DE PROJET DE CONTRAT ET DE RAPPORT

CONTRACT TITLE — TITRE DU CONTRAT

CONTRACTOR — ENTREPRENEUR

REVISED: June 30, 1987
REVISED: Dec.31, 1987

PLAN NO. — Nº DU PROJET: 37 ST. 23216-6-6123

CONTRACT NO. — Nº DU CONTRAT: 23216-6-6123/01-ST

TASK DESCRIPTION — DESCRIPTION DE LA TÂCHE	1986 July (1)	Aug. (2)	Sept. (3)	Oct. (4)	Nov. (5)	Déc. (6)	1987 Jan. (7)	Feb. (8)	Mar. (9)	(10)	(11)	(12)	TASK COST — COÛT DE LA TÂCHE: PLANNED, PRÉVU À L'ÉTUDE	ACTUAL, PRÉDÉTERMINÉ	E.T.C., À VENIR
PHASE 1															
1.1 Preliminary Design:															
Power Modules													4000	4000	00
1.2 Control Circuits															
1.3 Ordering Components													8000	8000	00
1.4 Fabrication:													2000	2000	00
Power Modules													8000	8000	00
1.5 Design:															
Control Electronics													12000	12000	00
1.6 Asssembly:															
Control Circuits													12000	11802.46	00
1.7 Preliminary Testing															
1.8 Preliminary Testing													8000	7570	00
of NCR test facility													430		00
PLANNED COST BY MONTH — COÛT PRÉVU POUR CHAQUE MOIS	8000	6000	4000	1700	8000	6000	8000	6000	6300				PLAN 54000		
ACT. PRÉDÉT. / E.T.C. BY MONTH — PRÉVISION POUR CH. MOIS	8000	6000	4000	1700	8000	6000	8000	6000	6300					ACTUAL COÛTS RÉELS 53802.46	E.T.C. À VENIR —

TIC

Supply and Services Canada / Approvisionnements et Services Canada

CONTRACT PLAN AND REPORT FORM – FORMULE DE PROJET DE CONTRAT ET DE RAPPORT

DSS-MAS 9143-3 (4/

CONTRACT TITLE – TITRE DU CONTRAT

CONTRACTOR – ENTREPRENEUR

Revised: June 30, 1987
Revised: Dec. 31, 1987

FILE NO. – Nº DU DOSSIER: 37 ST.23216-6-6123

CONTRACT NO. – Nº DE CONTRAT: 23216-6-6123/01ST

TASK DESCRIPTION / DESCRIPTION DE LA TÂCHE	1987 April (1)	May (2)	June (3)	July (4)	Aug. (5)	Sep. (6)	Oct. (7)	Nov. (8)	Déc. (9)	1988 Jan. (10)	Feb (11)	March (12)	TASK COST – COÛT DE LA TÂCHE: PLANNED / PRÉVU À L'ÉCHÉANCE	ACTUAL / PRÉCÉDEMMENT	E.T.C. / À VENIR
PHASE 2												April May			
2.1 Modification to Preliminary Design First Prototype Dev.													5000	5000	0
2.2 Design Optimization													7000	7000	0
2.3 Lab. Testing													4000	4000	0
2.4 Study of NRC Simulator													8000	8000	0
2.5 Study on NRC Test Facility Second Prototype Dev.													1000	1000	0
2.6 Evaluation of Performance													7000	7000	0
2.7 Final Report													4000	4000	0
													4000	1266.82	0
													6000	6000	0
PLANNED COST BY MONTH / COÛT PRÉVU POUR CHAQUE MOIS	4000	4000	4000	4000	4000	4000	4000	4000	4000	4000	3000	3000	PLAN 46000		
ACT. / PRÉCÉD. – E.T.C. BY MONTH / PRÉVISION POUR CHAQUE MOIS														ACTUAL / COÛTS RÉELS 43266.82	E.T.C. / À VENIR 0

7C

APPENDIX 3

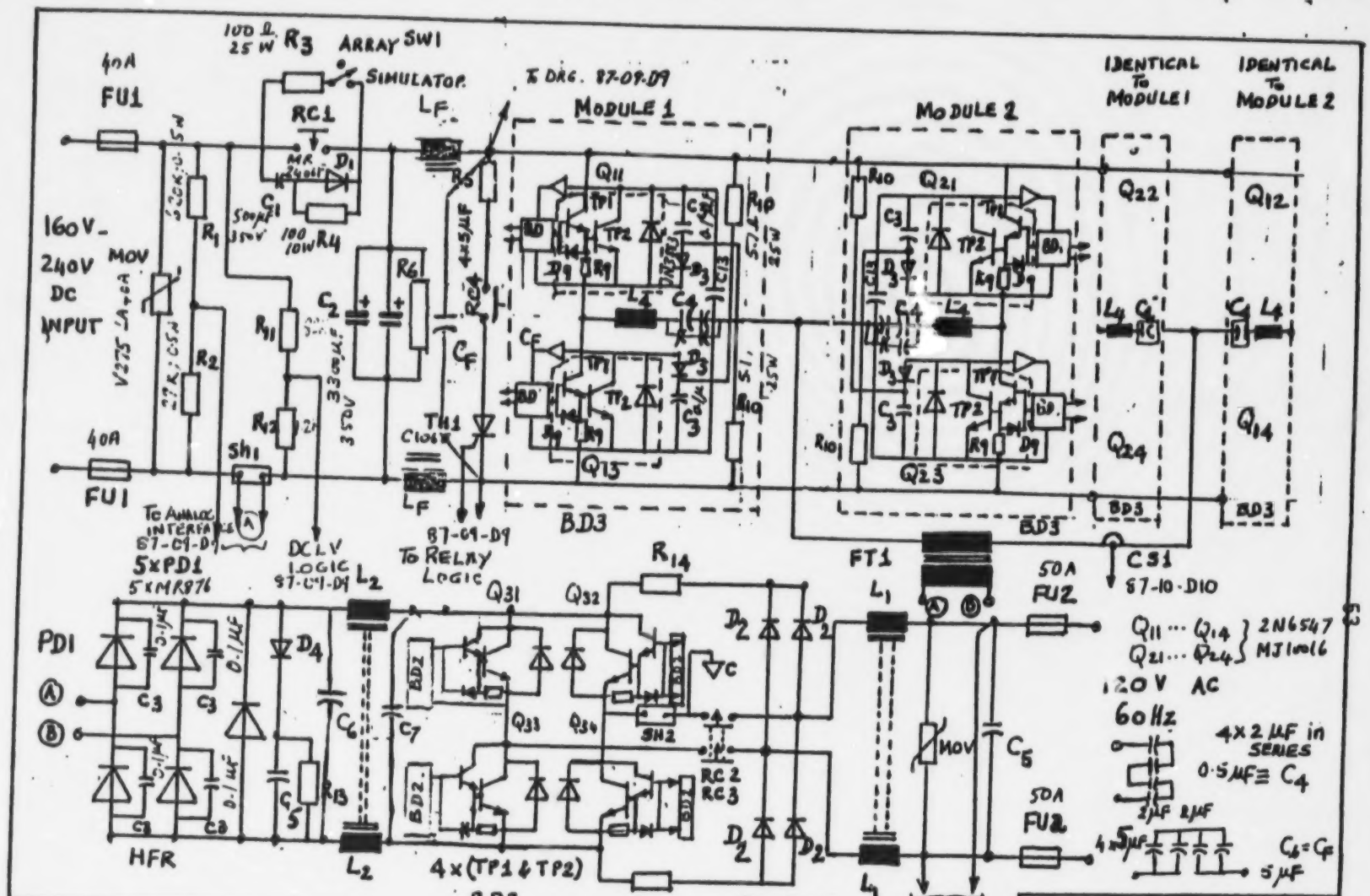

POWER CIRCUIT DETAILS
5 KW UTILITY-INTERACTIVE INVERTER
87-01-D1 UQTR

MODULE 1 CONTAINS POWER SWITCHES AND BASE DRIVERS: BD3 ≡ MODULE 1
UNWRAPPER BASE DRIVER MODULES BD2
SEE 87-03-D3

MODIFICATION		
July 6, 1987	V.R	
Sep 14, 1987	VR.	
MAY 24 1988	VR	

SHEET 1 OF 1

SUPPLY SERVICES CANADA - EMR
CONTRACT: 37ST. 23216-6-6123
UNIV. DU QUEBEC À 3 RIVIERES
V. RAJAGOPALAN. ING.
CTS-CANADA MAY 5, 1987

SERIAL NO	REFERENCE OR SYMBOLS	DEVICE COMPONENT NUMBER	QUANTITY	DEVICE/COMPONENT DETAILS	REMARKS/ OBSERVATIONS
1	FU1		2	DC FUSE 40A, 300V dc	CHOOSE NEAREST STANDARD
2	FU2		2	AC FUSE 50A, 150V ac	CHOOSE NEAREST STANDARD
3	RC1	MB3D Time delayed	1	POWER RELAY 12V,N.O. 60A	POTTER & BRUMFIELD
4	RC2		1	AC CONTACTOR-CONTACT NO	TO BEACTUATED BY 12V
5	RC3		1	AC CONTACTOR-CONTACT NO	DC RELAY. CHOOSE SUITABLE
6	SW1	TO BE MOUNTED OUTSIDE THE CABINET	1	DPDT-SWITCH-SIMULATOR	ARRAY CHOICE
7	RCA		1	RELAY CONTACT NORMALLY	C2 DISCHARGE CIRCUIT
				CLOSED - OPEN WHEN EQUIP.	RC1 & RC4 SHOULD BE ELECTRI-
				IS IN OPERATION	CALLY INTERLOCKED RC4 COULD
					BE AN AUX NC CONTACT TO RC1(NO)
8	MOV	V275LA40A	3	METAL OXIDE VARISTOR	309V D.C. GE OR EQUIPEMENT
9	R1	620K, 0.5W	1	ARRAY DC VOLTAGE	TO ANALOG INTERFACE
10	R2	27K, 0.5W	1	MEASUREMENT	CIRCUIT
11	R3	100Ω, 25W	1	CHARGE EQUALIZING RESISTOR	-USED WITH SIMULATOR
12	R4	100Ω, 10W	1	SNUBBER CAPACITOR DISCHARGE RESISTOR	
13	R5	100Ω, 25W	1	ARRAY VOLTAGE - CAPACITOR	DISCHARGE - TO BE
				MOUNTED ON UNWRAPPER CARD	
14	R6	10K, 2W	1	ARRAY VOLTAGE - CAPACITOR	DISCHARGE -
15	R9	56, 1W	12	BASE-EMITTER RESISTANCE	FOR TP2
16	R10	51, 25W	8	SNUBBER CAPACITOR DISCHARGE RESISTOR -	
				DALE NON INDUCTIVE	
17	R11	82K, 2W	1	ARRAY VOLTAGE	TO DCLV LOGIC
18	R12	1.2K, 2W	1	MEASUREMENT	TRIP CIRCUIT
19	R13	25K, 50W	1	RECTIFIER OUTPUT BLEEDER	
20	R14	2.7K, 2W	2	SOFT START RESISTOR	
21	C1	SPRAGUE 360X	1	500μF, 350V	COMPUTER GRADE ELECTROLYTIQUE
22	C2	MALLORY	4	3300μF., 350V d.c.	COMPUTER GRADE ELECTROLYTIQUE
		CGS332T350X5L			
23	C3	0.1μF, 400V	12	SPRAGUE 0.1MF, 400V	PROLYPROPYLENE, V. LOW LOSS
					@ 25 kHz

DATE	MODIFICATIONS SIGNATURE	DESIGNATION	SHEET 1 OF 3
July 5, 1987	VR	No. 87-01-L1 UQTR	SUPPLY SERVICES - EMR CANADA
Aug. 6, 1987	VR	Power Circuit Details 5 kW	CONTRACT: 37ST. 23216-6-6123
Sep 14, 1987	VR	Utility-interactive Inverter	UNIV. DU QUEBEC À 3 RIVIERES
Dec 20, 1987	VR	See also DRG.87-01-D1 UQTR	V. RAJAGOPALAN. INC.
May 27, 1988	VR		CTS-CANADA MAY 19 1987

SERIAL NO	REFERENCE OR SYMBOLS	DEVICE COMPONENT NUMBER	QUANTITY	DEVICE/COMPONENT DETAILS	REMARKS/ OBSERVATIONS
24	C4	735P SPRAGUE	4 X 4	RESONANT CIRCUIT CAPACITOR	POLYPROPYLENE, V LOW LOSS
		25µF, 800V, 30ARMS		4x2µF CAPACITORS IN SERIES	@ 25 kHz
25	C5	735P SPRAGUE	1 + 1	SPRAGUE 0.1µF, 400V	POLYPROPYLENE GRADE / PAPER
26	C7	5 µF, 400V	1	SPRAGUE 735P SERIES	EMI SUPPRESSOR NETWORK
26a	C6	735P SPRAGUE	4	SPRAGUE 4 X 5µF, 400V	POLYPROPYLENE-PLACED ACROSS
				2 IN PARALLEL & 2 UNITS IN SERIES	UNWRAPPER STAGE
27	D1	MR2406F	1	600V, 24A To-220A	OR EQUIVALENT
28	D2	3N250	1	600V, 1A DIODE BRIDGE	OR EQUIVALENT MDA 106A
29	D3	IN3883-245	8	400V, 6A FAST RECOVERY	SNUBBER DIODE FOR INV. TRANS.
30	D4	IN3883-245	1	400V, 6A FAST R DO-4	SNUBBER DIODE FOR 23 kHz RECT
31	D9	IN3883-245	12	400V, 6A DO-4	DARLINGTON SPEED-UP DIODE
32	PD1	MR876	5	600V, 50A FAST R. DO-5	POWER RECTIFIER @ 23 kHz HFR
33	TP1	2N6547	12	400V, 15A, TO-3	SWITCHMODE SERIES NPN POWER TRANSISTOR
33a	BD3	87-04-D4 UQTR	4	INVERTER DUAL THYRISTOR BASE DRIVER	
34	TP2	MJ10016	12	500V, 50A, TO-3	SWITCHMODE SERIES NPN POWER TRANSISTOR
35	TH1	C106E	1	500V, 4A, TO-126	MOUNTED ON UNWRAPPER CARD
36	BD2	87-03-D3-UQTR	1	UNWRAPPER TRAN. BASE DRIVER	SEE DRAWING 87-03-UQTR
38	L4	RESONANT CIR-	4	200 µH, 50A HIGH QUALITY Q	LOW LOSS AT 25 kHz DESIRED
		CUIT INDUCTOR		MULTI STAND/ LITZ WIRE	
39	L2	COUPLED INDUC-	1	1mH, 50A, SILICON STEEL	25 kHz COMPONENT < 30%
		TOR 120Hz+DC			
40	L1	COUPLED INDUC-	1	200µH, 50A, SILICON STEEL	EMI INTERFERENCE SUPPRESSION
		TOR EMI			
41	SH1	TRWB306	1	0.01Ω, 15W ARRAY CURRENT	OR EQUIVALENT TO TRW 8306
				MEASUREMENT	
42	SH2	TRW8306	1	0.01Ω, 15W AC MAINS CT.	OR EQUIVLALENT TO TRW 8306
				MEASUREMENT	
43	CS1	LEM-LT 100-P	1	CURRENT SENSOR LEM LT-100P	OR EQUIVALENT SHOULD BE
				87-05-D5 UQTR	SUITABLE UP TO 1 MHz
44	FT1*	87-06-D6 UQTR	1	FERRITE TRANS. 5kW, 25 kHz	PRIMARY: 18 TURNS, SEC: 24 TURNS LITZ WIRE LITZ WIRE

DATE	MODIFICATIONS SIGNATURE	DESIGNATION	SHEET 2 OF 3
July 6, 1987	R	No. 87-01-L1 UQTR	SUPPLY SERVICES - EMR CANADA
Aug. 6, 1987	R	(continued)	CONTRACT: 37ST. 23216-6-6123
Sep. 14, 1987	R	Power circuit details for 5 kW	UNIV. DU QUEBEC À 3 RIVIERES
May 25, 1988	R	Utility-Interactive Inverter 87-01-D1 UQTR	V. RAJAGOPALAN. INC.
			CTS-CANADA MAY 10, 1987

SERIAL NO	REFERENCE OR SYMBOLS	DEVICE COMPONENT NUMBER	QUANTITY	DEVICE/COMPONENT DETAILS	REMARKS/ OBSERVATIONS
45	FAN	120V AC, 1 PHASE		A SUITABLE FAN ON TOP OF THE UNIT IS SUGGESTED	
				EXHAUST TYPE OR EQUIVALENT	
46	HS1	435AA	4	EG & WAKEFILED EXTRUDED HEAT SINKS EACH MUST DISSIPATE	
				A MAXIMUM OF 100 W	
47	LF	50 μH, 30 A	1	COUPLED HF INDUCTOR	
				FILTER	
48	CF	5 μF, 400 V	4×5 μF	2 IN PARALLEL & 2 UNITS IN	
				SERIES	
49	C13	0.1 μF, 400V	4	OVERVOLTAGE PROTECTION	FOR THYRISTOR MODULES
				POLYPROPYLENE TYPE	

DATE	MODIFICATIONS SIGNATURE	DESIGNATION	SHEET 3 OF 3
July 6, 1987	VR	No. 87-01-L1 UQTR	SUPPLY SERVICES - EMR CANADA
Aug 6, 1987	VR	(continued)	CONTRACT: 37ST. 23216-6-6123
Sep 14, 1987	VR	Power Circuit Details for 5 kw	UNIV. DU QUEBEC À 3 RIVIERES
May 25, 1988	VR	Utility-Interactive Inverter	V. RAJAGOPALAN. INC.
		87-01-D1 UQTR	CTS-CANADA MAY 10, 1987

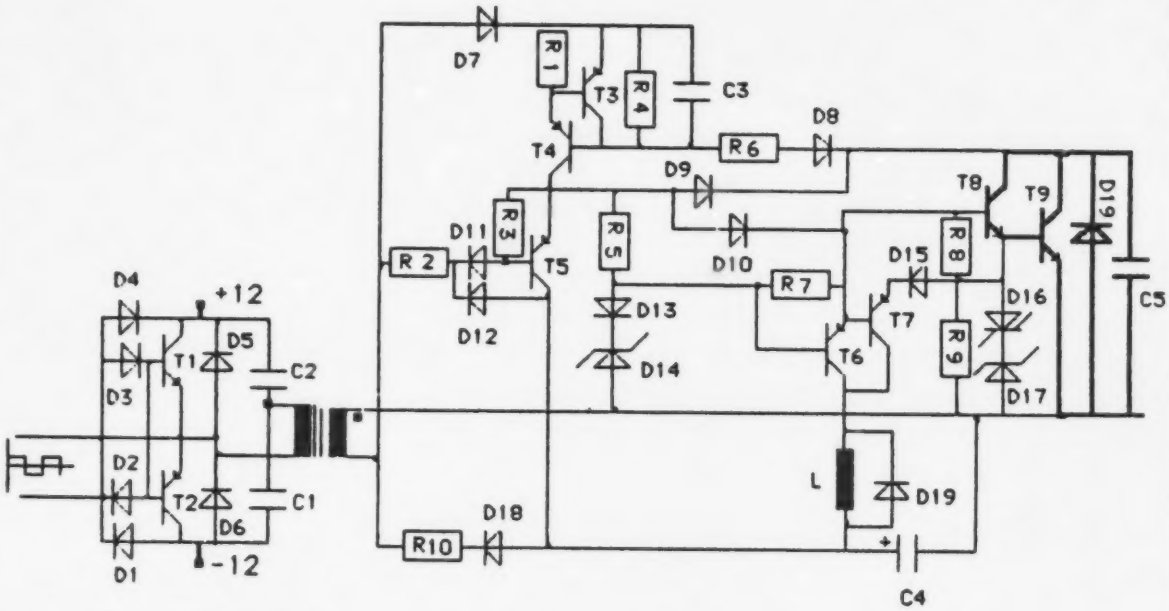

D1 : 1N4934	R1 : 1E0	C1 : 100 UF,25V	T1 : D44H11
D2 : 1N4934	R2 : 47E0	C2 . 100UF,25V	T2 : D45H11
D3 :1N4934	R3 : 470 E0	C3 . 4.7NF, 100V	T3 : 2N2905A
D4 :1N4934	R4 : 100 E0	C4 : 6.8UF,160V	T4 : D45H11
D5 .1N3880	R5 : 82 E0	C5 : 22NF, 600V	T5 : 2N5322
D6 :1N3880	R6 : 47 E0		T6 : D45H11
D7 : 1N4935	R8 . 47 E0		T7 : D45H11
D8 : 1N4947	R9 : 22 E0		T8 : 2N6547
D9 : 1N4947			T9 : MJ10016
D10 : 1N4935			
D11 : 1N4950			
D12. 1N4950			
D13 : 1N4935			
D14 :BZX85C5V			
D15 : 1N4935			
D16 .BZW045V8			
D17 :BZW045V8			
D18 : 1N4935			
D19 : 1N4935			

MODIFICATIONS	DESIGNATION	SHEET 1 OF 1
MAY 27, 1988 VR	DUAL THYRISTOR BASE DRIVER MODULE BD3 87-02-D2 87-02-L2	SUPPLY SERVICES CANADA-EMR CONTRACT: 37ST.23216-6-6123 UNIVERSITE DU QUEBEC À TROIS-RIVIERES V. RAJAGOPALAN ING. K. AL HADDAD SEPTEMBER 1987

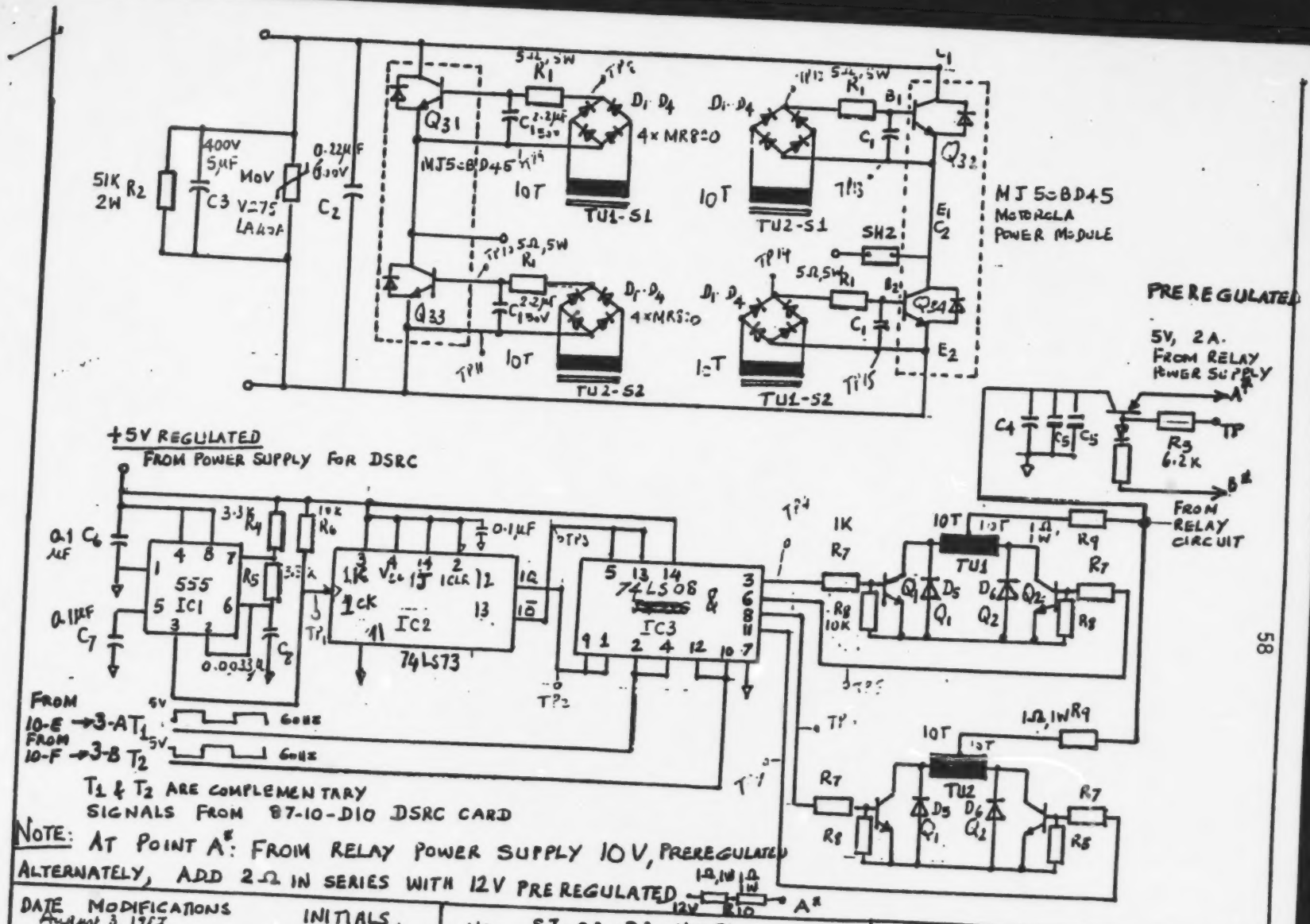

DATE	MODIFICATIONS	INITIALS
August 3, 1987		VRajagopalan
MAY 25, 1988	VR.	

No. 87-03-D3 UQTR
UNWRAPPER BASE DRIVER BD2
A. BELLAHNID / RAJA

SHEET 1 OF 1
SUPPLY SERVICES CANADA - EMR
CONTRACT: 37ST. 23216-6-6123
UNIV. DU QUEBEC À TROIS-RIVIERES
V. RAJAGOPALAN ING.
CTS CANADA
JULY 6, 1987

UNWRAPPER BASE DRIVER BD2

COMPONENT SIDE (TOP LAYER)

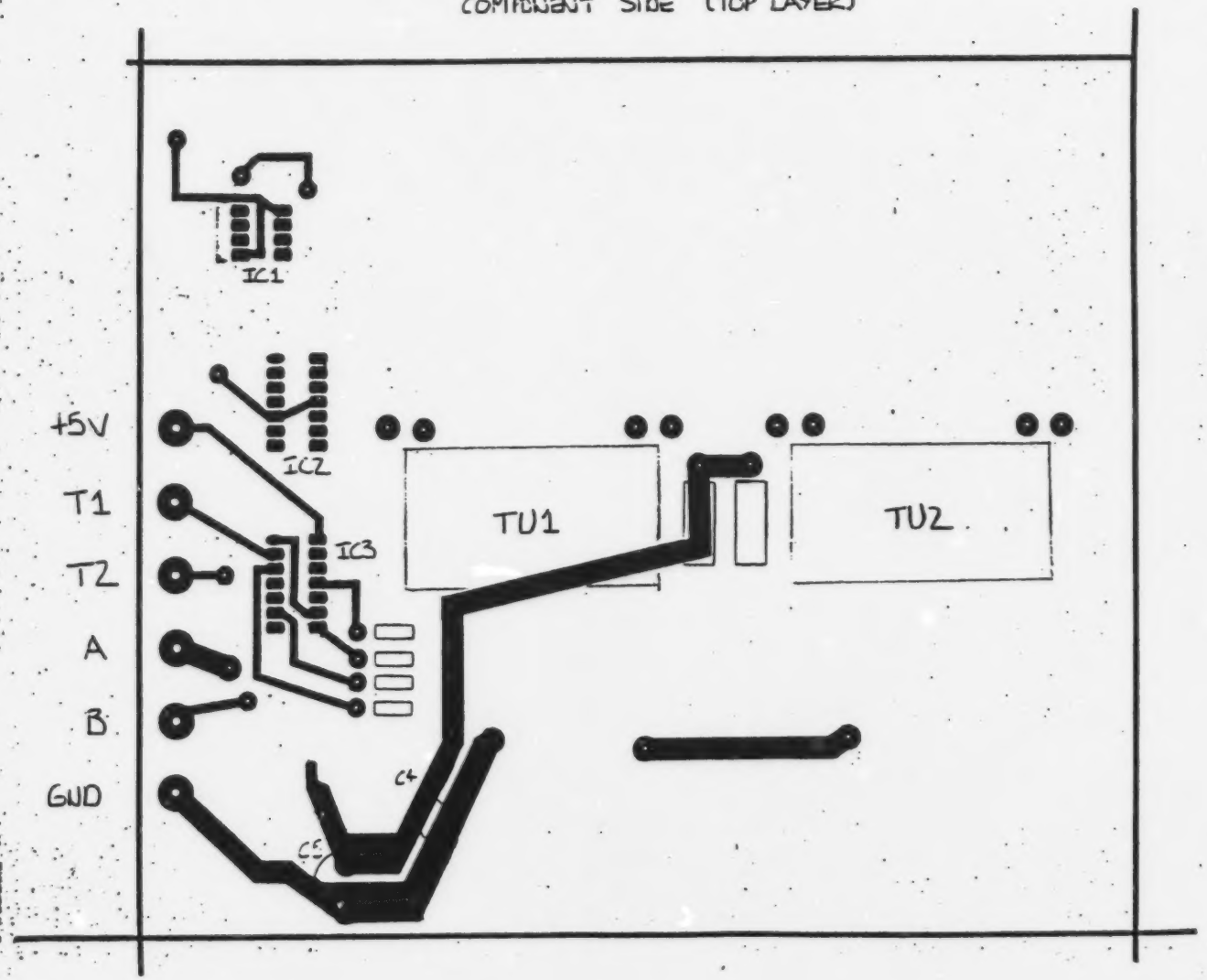

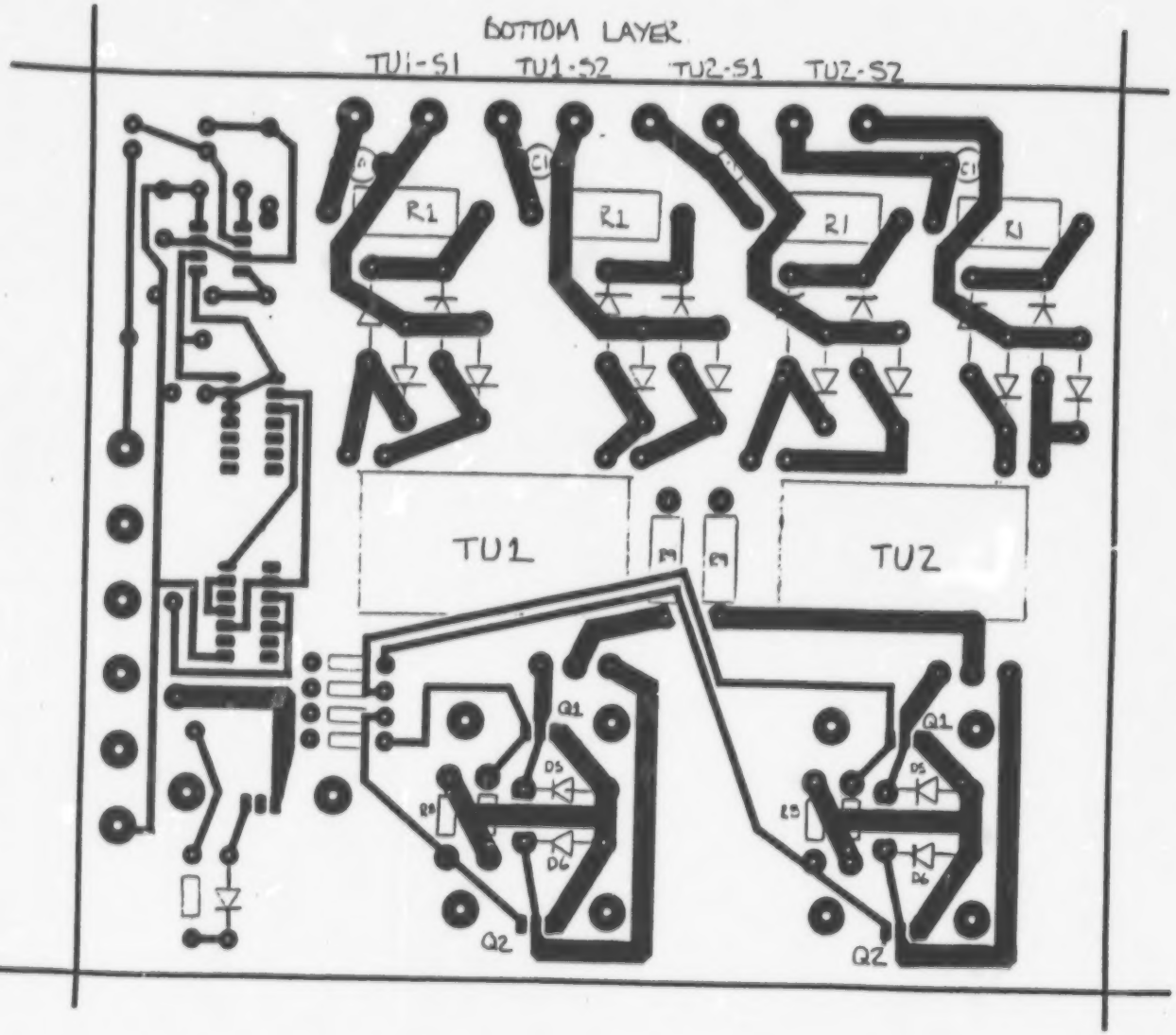
BOTTOM LAYER
TU1-S1 TU1-S2 TU2-S1 TU2-S2
R1
R1
R1
R1
C1
C1
TU1
TU2
Q1
Q2
Q1
Q2
D5
D6
D5
D6

SERIAL NO	REFERENCE OR SYMBOLS	DEVICE COMPONENT NUMBER	QUANTITY	DEVICE/COMPONENT DETAILS	REMARKS/ OBSERVATIONS
1	Q31	MJ50BD45	1	MOTOROLA POWER MODULE	600V, 50A, hfe = 100 min.
	Q33	SAME AS TP1, & D9+R9	TP2, 2		SEE 87-01-01-D1 & 87-01-L1
2	Q32	MJ50BD45	1	MOTOROLA POWER MODULE	600V, 50A, hfe = 100 min
	Q34	SAME AS TP1, TP2, D9 & R9	2		SEE 87-01-D1 & 87-01-L1
3	MOV	V275LA40A	1	OVERVOLTAGE PROTECTOR	VARISTOR. SEE 87-01-DI & 87-01-L1
4	TU1	FERRITE		FERROXCUBE EE 3E2A	PULSE TRANSFORMERS
		TRANSFORMER		783E608, FORMER 990-030-09	
				PRIMARY 10 + 10 TURNS	
				2 SECONDARIES BIFILAR	
				WINDINGS 10 + 10 TURNS	
				INSULATION BETWEEN	
				PRIMARY/SEC 1/SEC2	
				MINIMUM 240V RMS	
5	TU2	FERRITE		IDENTICAL TO TU1	
		TRANSFORMER			
6	D1	MR820	4	FAST RECOVERY RECTIFIERS	
7	D2	MR820	4	" " "	
8	D3	MR820	4	" " "	
9	D4	MR820	4	" " "	
10	D5	MR820	2	" " "	
11	D6	MR820	2	" " "	
12	C1	2.2μ	4	POLYSTERENE	
13	C2	0.22μ	1	POLYSTERENE	
14	C3	5μF, 400V	1	SPRAGUE, POLYPROPYLENE	LOW LOSS
15	C4	1μF, 50V	1	TANTALUM	
16	C5	470μF, 40V	2	ELECTROLYTIC, COMPUTER GRADE	

DATE	MODIFICATIONS SIGNATURE	DESIGNATION	SHEET 1 OF 2
May 25, 1988	VR	No. 87-03-L3 UQTR Base Driver for Unwrapper Transistors - BD2 Components' List; POWER MODULES FOR UNFOLDER A. Bellahnid/A.Charette/Raja	SUPPLY SERVICES - EMR CANADA CONTRACT: 37ST.23216-6-6123 UNIV. DU QUEBEC À 3 RIVIERES V. RAJAGOPALAN. INC. CTS-CANADA JULY 5, 1987

SERIAL NO	REFERENCE OR SYMBOLS	DEVICE COMPONENT NUMBER	QUANTITY	DEVICE/COMPONENT DETAILS	REMARKS/ OBSERVATIONS
17	C6	0.1μF, 50V	1	POLYSTERENE	POWER SUPPLY FILTER
18	C7	0.1μF, 50V	1	" "	
19	C8	0.0033μF, 50V	1	POLYSTERENE	OSCILLATOR FOR ≈ 45 kHz
20	R1	5Ω, 5W	4	RESISTOR	
21	R2	51K, 2W	1	DISCHARGE RESISTOR	
22	R3	6.2K, 0.5W	1	RESISTOR	
23	R4	3.3K, 0.5W	1	RESISTOR	
24	R5	3.3K, 0.5W	1	RESISTOR	
25	R6	10K, 0.5W	1	RESISTOR	
27	R7	1K, 0.5W	4	RESISTOR	
28	R8	10K, 0.5W	4	RESISTOR	
29	R9	1, 1W	2	POWER RESISTOR	
30	IC1	NE555	1	PRECISION TIMER	
31	IC2	SN74LS73	1	DUAL D TYPE FLIP FLOP	
32	IC3	SN74LS08	1	QUAD. POSITIVE AND GATE	

DATE	MODIFICATIONS SIGNATURE	DESIGNATION	SHEET 2 OF 2
		No. 87-03-L3 UQTR Base Driver for Unwrapper Transistors - BD2 Compoents' List A. Bellahnid/A. Charette/Raja	SUPPLY SERVICES - EMR CANADA CONTRACT: 37ST.23216-6-6123 UNIV. DU QUEBEC À 3 RIVIERES V. RAJAGOPALAN. ING. CTS-CANADA JULY 5, 1987

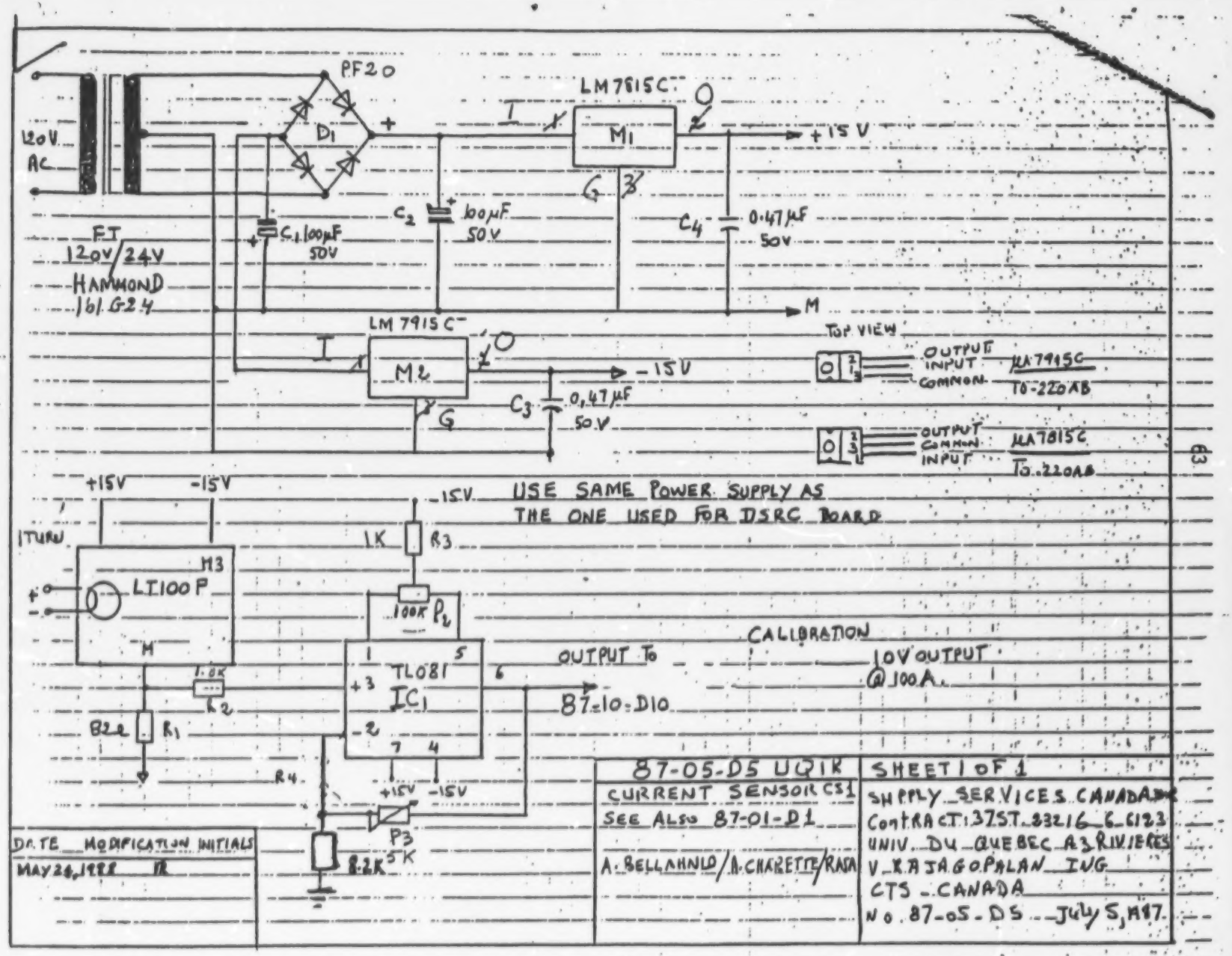
120V AC
PF20
D1
C1 100µF 50V
C2 100µF 50V
LM7815C
M1
+15V
C4 0.47µF 50V
M
FT 120V/24V
HAMMOND 161 G24
LM7915C
M2
-15V
C3 0.47µF 50V
TOP VIEW
OUTPUT
INPUT
COMMON
µA7915C
TO-220AB
OUTPUT
COMMON
INPUT
µA7815C
TO-220AB
+15V
-15V
USE SAME POWER SUPPLY AS THE ONE USED FOR DSRC BOARD
1TURN
M3
LI100P
1K R3
100K P2
TL081
IC1
OUTPUT TO
87-10-D10
CALIBRATION
10V OUTPUT @ 100A
1.0K R2
82Ω R1
R4
P3 5K
8.2K
87-05-D5 UQIR
CURRENT SENSOR CS1
SEE ALSO 87-01-D1
A. BELLAHNID/A. CHARETTE/RAJA
SHEET 1 OF 1
SUPPLY SERVICES CANADA
CONTRACT: 37ST.33216-6-6123
UNIV. DU QUEBEC A3 RIVIERES
V. K. RAJAGOPALAN ING
CTS - CANADA
No. 87-05-D5 July 5, 1987
DATE MODIFICATION INITIALS
MAY 24, 1988 R

CURRENT SENSOR CS1

(SINGLE SIDED PCB LAYOUT)

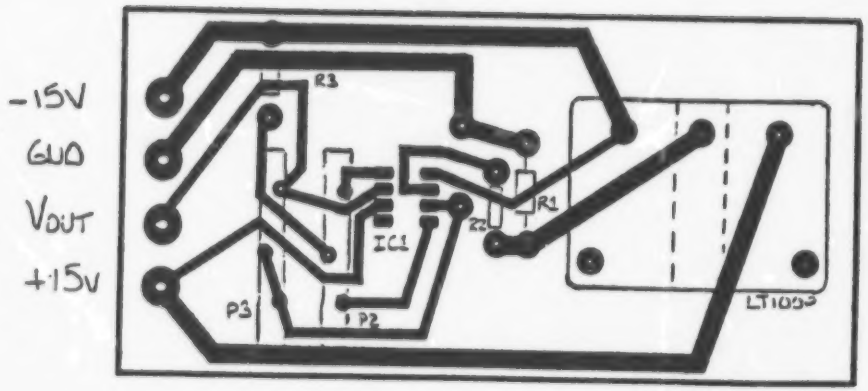

SERIAL NO	REFERENCE OF SYMBOLS	DEVICE COMPONENT NUMBER	QUANTITY	DEVICE/COMPONENT DETAILS	REMARKS/ OBSERVATIONS
1	R1	82Ω, 0.25 W	1	RESISTOR	
2	R2	1.8K, 0.25 W	1	" "	
3	R3	1K, 0.25 W	1	" "	
4	R4	8.2K, 0.25 W	1	" "	
5	P2	POT 100K	1	" "	
6	P3	POT 5K	1		
7	C1	100μF, 35 V	1	ELECTROLYTIC 100μF, 35V	
8	C2	100μF, 35 V	1	" " "	
	C3	0.47μF, 35 V	1	TANTALUM CAPACITOR	
	C4	0.47μF, 35 V	1	TANTALUM CAPACITOR	
9	D1	PF20	1	EDI 8326	
10	M1	LM7815C	1		
11	M2	LM7915C	1		
12	M3	LT100P	1	LEM MODULE 100A	
				RATIO 1: 1000	
				INT. RES. 30Ω	
13	IC1	TL081	1	AMPLI. OPER.	
14	FT	161G24	1	TRANSFORMER PRIMARY: 120V	AC, SEC: 24 V
				HAMMOND	

DATE	MODIFICATIONS SIGNATURE	DESIGNATION	SHEET 1 OF 1
		No. 87-05-L5 UQTR Current Sensor CS1 List of Components A. Bellahnid/A.Charette/Raja See 87-01-D1	SUPPLY SERVICES - EMR CANADA CONTRACT: 37ST.23216-6-6123 UNIV. DU QUEBEC À 3 RIVIERES V. RAJAGOPALAN. ING. CTS-CANADA JULY 5, 1987

HIGH FREQUENCY LINK TRANSFORMER DESIGN FT1

CORE EC 90 or 2U EQUIVALENT
CORE MATERIAL: Ferrite H7C4 EQUIVALENT TDK
PRIMARY TURNS: 18; PRIMARY WIRE LITZ, #8AWG; LENGHT OF WIRE= 9'+9'= 18'
NELC 660/36 SPDN, 2 IN PARALLEL
WIRE INSULATION: 130°C RATING (ESTERMIDE)
SECONDARY TURNS: 24; SECONDARY WIRE: LITZ #LOAWG; LENGHT OF WIRE=15'+15'=30'
NELC420/36SPDN, 2IN PARALLEL
WIRE INSULATION: 130°C RATING
LAYER INSULATION: MYLAR WRAP ON LITZ COIL
FLUX DENSITY: 0.3T MAX
SEE DRAWING 87-11-D11

1 MH INDUCTOR DESIGN: L_2

CORE: AH 537 (ARNOLD ENGINEERING)
CORE TYPE: U; CORE MATERIAL: SILICON STEEL 0.004"
NUMBER OF COILS = 2; TURNS PER COIL: 30
WIRE SIZE: #9 AWG; WIRE TYPE: BATTERY CABLE MULTISTRAND
WIRE INSULATION: 130°C RATING

COIL TUBE: 0.030 IN KRAFT PAPER; LAYER INSULATION: 0.010 IN KRAFT
COIL COVER: 0.030 IN KRAFT PAPER
AIR GAP LENGTH: 0.045 IN; FLUX DENSITY: 1.5 T max
HIGH FREQUENCY CURRENT (<30KHZ) 50A PEAK

200 H INDUCTOR DESIGN: L_1

CORE: AH12(ARNOLD); U TYPE, SILICON STEEL (0.004in)
NUMBER OF COILS = 2 (1 per leg); TURNS PER COIL: 9
WIRE SIZE: #8AWG (SOLID); 130°C RATING
COIL TUBE: 0.030 IN KRAFT PAPER; LAYER INSULATION: 0.010 IN KRAFT PAPER
COIL COVER: 0.030 IN KRAFT PAPER
AIR GAP PER LEG: 0.010 IN; FLUX DENSITY: 1.5 Tmax

200 H RESONANT CIRCUIT INDUCTOR L_4

FERRITE CORE; LITZ WIRE NELC 660/365SPDN (#8AWG EQUIVALENT); 2.3 metres (7.5') long
WIRE INSULATION: 130°C RATING
WIRE SIZE: MULTISTRAND & INSULATED TO MINIMIZE RESISTANCE
à 25 KHZ• GOOD FOR 50A PEAK CURRENT
NUMBER OF TURNS: 16 TURNS; 8 TURNS/LAYER; 2 LAYERS POT CORE 6656 3C8
AIR GAP = 0.4 MM (0.016")

MODIFICATIONS DATE	SIGNATURE	DESIGNATION	SHEET 1 OF 1
July 4, 1987	VR	No. 87-06-D6 UQTR	SUPLLY SERVICES-EMR CANADA
May 25, 1988	VR	FERRITE TRANSFORMER FT1	CONTRACT: 37ST.23216-6-6123
		5 kW à 25 kHz	UNIV. DU QUEBEC A 3-RIVIERES
		DESIGN DATA FOR L1, L2,	V. RAJAGOPALAN, ING.
		L4 AND FT1	CTS-CANADA MAY 10, 1987

APPENDIX 4 66a

National Research Council Canada
Conseil national de recherches Canada

Division of Electrical Engineering
Division de génie électrique

ERB-970

A System for Static and Dynamic Performance Testing of Terrestrial Photovoltaic Power Conditioners

L. Ayer

April 1985

Canada

NRCC No. 24749

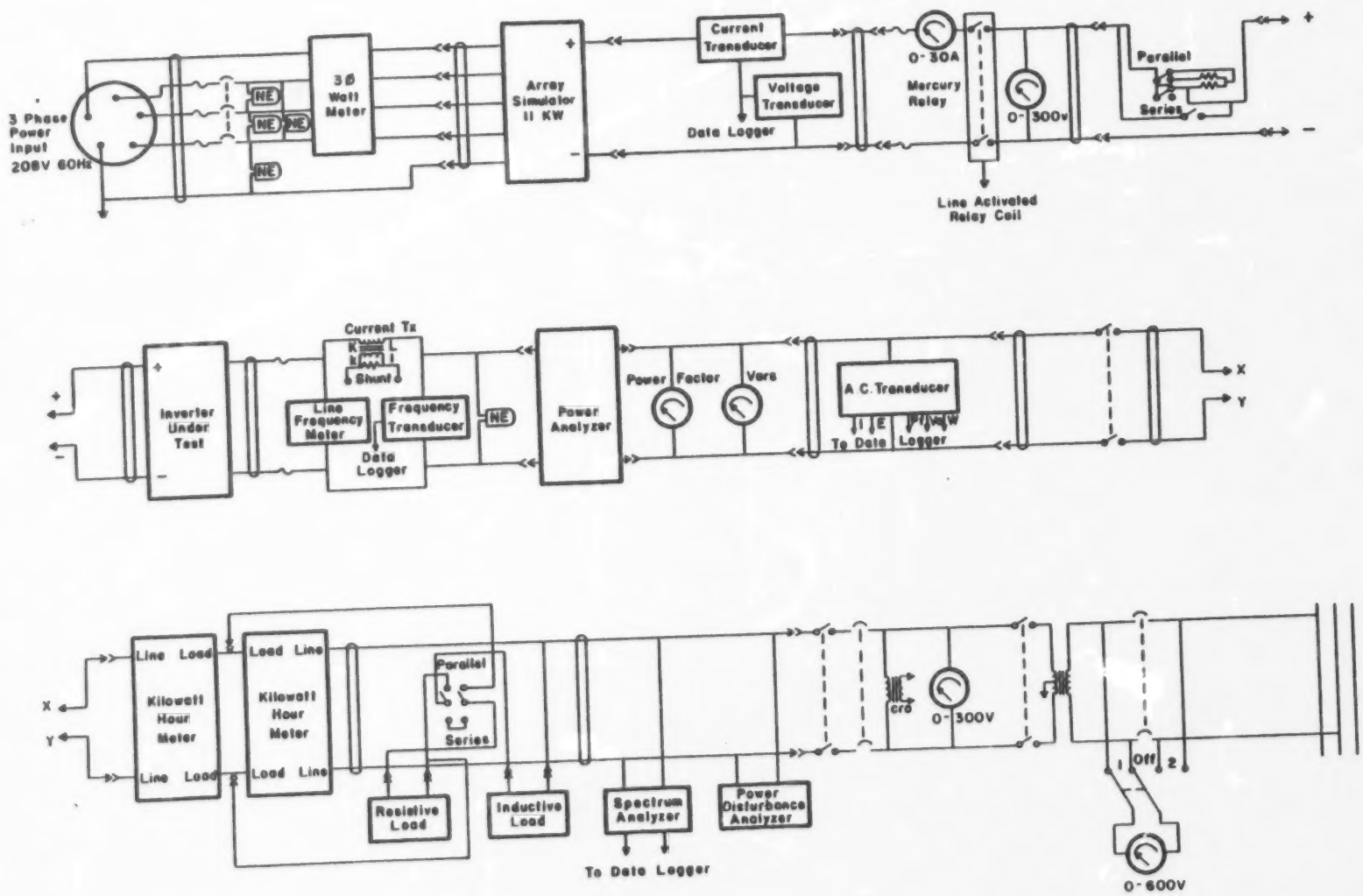

Figure 1. Complete test system

The American Solar Energy Society, Inc. and The Solar Energy Society of Canada, Inc.

Sections of the International Solar Energy Society, Inc.

SOLAR '87

July 11 - July 16, 1987 Portland, Oregon

PROCEEDINGS OF THE 1987 ANNUAL MEETING

Edited by
John Hayes
Dennis A. Andrejko

PHOTOVOLTAIC UTILITY INTERACTIVE INVERTER SYSTEMS

V. Rajagopalan
K.S. Rajasekara
Université du Québec
Trois-Rivières, Qué.,G9A 5H7 Canada

John Ayer
Electrical Engineering Division
National Research Council,
Ottawa, Ont., K1A 0R8, Canada

ABSTRACT

The object of this paper is to study the essential configurations of economical dc to ac conversion systems in order to improve their conversion efficiencies with some innovative designs specially using resonant converters. A novel design using a phase shifted dual series resonant converter (DSRC) is proposed. This paper reports the results of the investigation on the use of dual series resonant inverter system with phase-shifted control strategy in order to improve the overall performance of the utility interactive system.

1. INTRODUCTION

With the increasing importance for the use of photovoltaic energy for residential purposes, considerable research has been done on the development of economical power conditioning system between the variable dc output voltage of the photovoltaic array and the ac utility mains. The selection of the proper power circuit topology and its design for the conversion of the dc photovoltaic power to 60 Hz ac, in phase with the utility is the most important functional aspect of the total system. The object of this paper is to study the essential configurations of economical dc to ac conversion systems in order to improve their conversion efficiencies with innovative designs specially using resonant converters. The essential requirement of a utility interface system is to produce a sinusoidal current with low harmonics of low amplitudes and high conversion (dc to ac) efficiency over a large range of input current and voltage. This paper discusses a novel design of a dual series resonant converter with phase-shifted control strategy and investigates its use as a utility interactive inverter in photovoltaic power conversion scheme.

2. UTILITY-INTERACTIVE INVERTERS

The conceptual designs for utility-interactive photovoltaic power conditioning system are available in the literature[1,2]. A scheme based on a chopper and an inverter is shown in Fig.1. A constant current is supplied from a dc source and converted into a low distortion sinusoidal current which is transferred to utility in phase with its voltage. The system has a boost-stage transistor chopper operating at 20 kHz, a buck-stage transistor chopper operating at 20 kHz and a bridge-type transistor inverter operating at 60 Hz. Figure 2 shows another scheme in which the dc power is directly converted to ac and fed to utility in one step using transistor bridge inverter. The system is simple and economical.

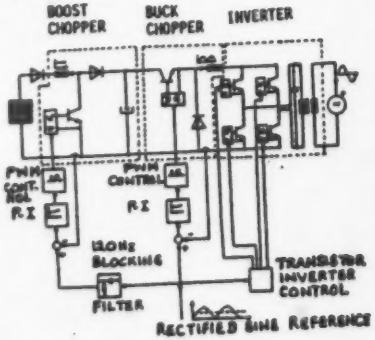

Fig. 1. Chopper-inverter scheme

In both the above schemes, an isolation transformer operating at 60 Hz is required. This is bulky and expensive. Also, there will be losses in the system due to the switching action of the bipolar devices at 20 kHz. The availability of the Mosfet power modules makes them attractive for their use as switching devices in these schemes. In order to eliminate the use of bulky 60 Hz isolation transformer, the use of high frequency dc link pulse width modulated (PWM) inverters as the power conditioning system has been reported in the literature[3,4]. In this case, the dc voltage of the photovoltaic array is first modulated to high frequency by a PWM inverter, which is then transformer (ferrite-core type) coupled and demodulated using a high frequency diode bridge rectifier. This is then unfolded using a transistor inverter and fed to the utility, in phase with its voltage. This scheme is similar to the scheme in fig.1, having three conversion stages. The main drawback of the scheme lies in its use of a relatively complex control strategy of the PWM inverter stage.

Recently, the use of parallel resonant converters as the power conditioning system has been reported[5]. In this case, the system is operated below the resonant frequency of the resonant circuit and the power is controlled by varying the operating frequency. This system will, therefore, operate in discontinuous mode below a certain frequency resulting in higher stresses in the devices at the turn-on instants and additional switching losses.

3. DUAL SERIES RESONANT CONVERTERS

The use of phase-shifted control of dual series resonant series converter (DSRC) at constant frequency has several advantages over the variable frequency control. By fixing the operating frequency of the DSRC above the audible level, variable output voltage from a maximum to zero can be obtained by varying the phase shift from 0° to 180°. The series resonant circuit can be designed for optimum efficiency at a single frequency. A power conversion process employing two phase-modulated high frequency inverters with a tank circuit excited at resonant frequency is presented in reference 6. The use of two series and parallel resonant inverters with phase-shifted operation for induction heating applications is described in reference 7. The system uses thyristors and has been operated below the resonant frequency.

3.1 DSRC As Utility Interface Inverter

The schematic diagram of the photovoltaic interface using DSRC is shown in Fig.3.

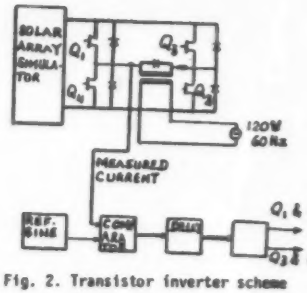

Fig. 2. Transistor inverter scheme

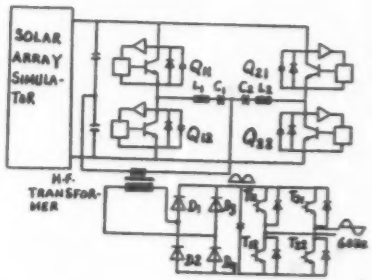

Fig. 3. Photovoltaic interface using DSRC

The photovoltaic dc power is obtained from a solar array simulator, which provides the characteristics similar to a photovoltaic array. This dc power is converted to ac using two series resonant converters (SRC). Two dual thyristors are used as the controlled switching devices for each SRC; a dual-thyristor is essentially a bipolar transistor with a suitable control logic which gives the device those characteristics that are dual to that of a conventional thyristor[8]. The use of dual-thyristors as devices for the SRC enables the operation of the converter at a high frequency with lossless snubbers.

3.2 Principle of Operation

The DSRC operates at a convenient fixed frequency above the audible range (for example, 23 kHz). The switching instants for the devices in the same leg are complementary. The output power is controlled by varying the phase shift θ between the turn-on instants of Q11 and Q21.

The duration of base drive for each dual-thyristor is 180°. When the phase shift between Q11 and Q21 is 0°, the current in the primary of the high frequency ferrite transformer is maximum; when the phase shift is 180°, the primary current is zero. Hence, by varying θ between 0° and 180°, the output power can be controlled from a maximum to zero. The secondary current of the transformer is rectified and fed to the ac utility using a conventional transistor inverter acting as an unfolding stage. The devices in the unfolding stage inverter are switched on at the zero-crossings of the utility voltage.

The DSRC operates at a frequency above the resonant frequency of the LC resonant circuit. This mode of operation of the inverter results in negligible switching losses because, each dual-thyristor automatically conducts when the device voltage exceeds a preset positive value (<4 V) and the current rise is smooth. Hence, a capacitor which acts as a lossless snubber across each dual-thyristor will be sufficient.

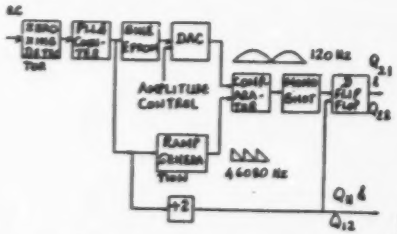

Fig. 4. Control scheme for DSRC

3.3 Control Scheme

A schematic diagram of the control scheme of the DSRC is shown in Fig.4. A 120 Hz rectified sine wave is generated in phase with the ac utility voltage, using phase locked loop (PLL) and digital circuits. Also, a 46080 Hz (2 x 768 x 60) ramp waveform is generated and compared with the rectified sine wave. The transistors Q21 and Q22 are turned on at the intersection of sine and ramp waveforms. The devices Q11 and Q12 are turned on at fixed points as illustrated in Fig.5. The output power is varied by varying the amplitude of the rectified sine wave, which in turn varies the phase shift between Q11 and Q21.

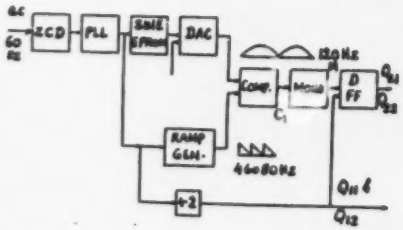

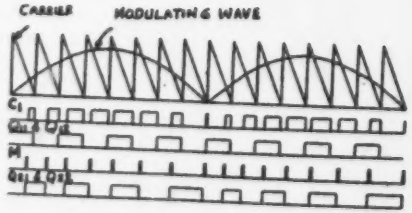

Fig. 5. Signal outputs for DSRC Control scheme

4. DESIGN EXAMPLE

Let the required specifications of the DSRC be as follows:
Power output, $P_u = 5$ kW

Ac utility voltage, $V_u = 120$ V

Ac utility frequency, $f_u = 60$ Hz

Array voltage, $V_{dc} = 160$ V(min)-240(max)
The objective is to obtain the rated power at the minimum array voltage.
Utility line current = $I_u = P_u/V_u = 41.66$ A

Average dc link voltage = $2\sqrt{2}\ V_u/\pi = 108$ V

Average dc link current=$I_d = 2\sqrt{2}\ I_u/\pi = 37.5$ A

Peak value of dc link current= $\sqrt{2}\ I_u = 58.9$ A

Selecting a transformer turns ratio as 1: 2.25, the primary peak current can be calculated:
$I_p = 2.25 \times 58.9 = 132.5$ A

In the configuration shown in Fig.3., the primary current is the sum of the two series resonant circuit currents

$$I_p = I_{c1} + I_{c2}$$

The primary current is maximum, when the turn-on phase shift between the two half-bridges is 0° and it is a minimum when the phase shift is 180°. Hence the peak resonant circuit current at the minimum of the supply voltage is

$$I_{c1} = I_p / 2 = 66.3 \text{ A}$$

Due to practical problems, it may not be possible to operate at exactly 0° phase shift. In order to obtain 66.3 A at more than 0° phase shift, about 12% more peak current is taken as peak resonant current, say 1.12 x 66.3 = 75 A. Choosing a resonant frequency of 18 kHz, the resonant circuit elements can now be calculated:

$$I_{cp} = E\sqrt{C/L} = 75 \text{ A}$$

$$f_r = 1 / 2\pi\sqrt{LC} = 18 \text{ kHz}$$

The values of C and L can be calculated from the above two relations:

$$C = I_{cp} / 2\pi f_r E$$

$$L = E / 2\pi f_r I_{cp}$$

At the minimum array dc voltage of 160 V, E = 80 V. Substituting the numerical values, the values of L and C can be calculated:
L = 9.4 μH (≈ 10 μH) and C = 8.29 μF (≈ 9 μF)

As the array dc input is increased, the phase shift has to be increased to keep the load current at the desired constant value. Further, at the maximum value of the array voltage of 240 V, the peak resonant current can be calculated:
$I_{cp} = 120\sqrt{3/10} = 114$ A

The maximum peak current of Motorola MJ 10016 transistor is 75 A and 2 transistors in parallel can be used to meet the current requirements.

5. EXPERIMENTAL RESULTS

An experimental DSRC scheme was built as given in Fig.3. Figure 6 shows the results when the dc array power is fed to the ac utility. We can notice that a nearly sinusoidal current is fed to the mains in phase with the ac utility voltage. These preliminary results show excellent promise for the development of a very efficient power conditioner of 5 kW capacity using the dual series resonant converter. This work is in progress and is expected to be reported in the near future.

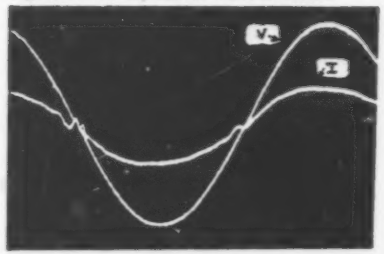

Fig. 6. Utility voltage and current waveforms V = 20V/div; I = 5A/div

A simulation study of the DSRC was done using a general purpose power converter simulator ATOSEC5[9]. The details of these results are available in the literature[10]. The simulation results predict the sinusoidally modulated output current.

6. CONCLUSIONS

The use of dual series resonant converter for utility interface operating at constant frequency has been discussed in this paper. It has been seen from experimental and simulation results, that a solar array power can be fed to utility at unity power factor. The amount of power transferred can be easily controlled by varying the phase shift between the two half bridges from 0° to 180°. The system has been operated at 23 kHz using lossless snubbers.

A design example has been worked out to illustrate the selection of power circuit elements. The use of dual-thyristors as power devices ensures autoprotection of the power devices. An experimental high frequency link utility interactive DSRC was built to demonstrate the use of DSRC for injecting sinusoidal current to the ac utility at unity power factor.

7. REFERENCES

[1] V. Rajagopalan, K. Al Haddad and J. Ayer, "Innovative Utility-Interactive dc to ac Power Conditioning System ", IEEE IECON Proceedings, San Francisco 1985, pp.471-476

[2] V. Boegli and R. Ulai, "Realization of New Inverter Circuit for Direct Photovoltaic Energy Feedback into the Public Grid", IEEE Trans.on Industry Applications, Vol.IA-22, pp.255-258, March/April 1986.

[3] B.K.Bose et al, "Microcomputer Control of a Residential Photovoltaic Power Conditioning System", IEEE Trans.on Industry Applications, Vol.IA-21, pp.1182-1191, September/October 1985.

[4] A. Coconi et, "High Frequency Isolated 4 kW Photovoltaic Inverter for Utility Interface", Proc.PCI Conference, September 13-15, 1983, Geneva.

[5] A.K.S. Bhat and S.B. Dewan, "Analysis and Design of a High Frequency Link DC to Utility Interface Using Square Wave output Resonant Inverter", IEEE-PESC, Vancouver, pp.333-342, 1986.

[6] L.J.Pinel, "Phase Modulated resonant Power Conversion Techniques for High Frequency Link Inverters", IEEE Trans.on Industry Applications, Vol.IA-22, No.6, pp.1044-1051, Nov/Dec 1986.

[7] P. Savary et al, "Resonant Vector Control Based High Frequency Inverter", IEEE-PESC, Toulouse, pp.204-213, 1985.

[8] K. Al Haddad et al, "DC to DC Converters with High Frequency AC Link", IEEE Trans.on Industry Applications, Vol.IA-22, No.2, pp.244-254, March/April 1986.

[9] V. Rajagopalan, "Computer-Aided Analysis of Power Electronic Systems", Marcel Dekker Inc, New York, 1987.

[10] V. Rajagopalan, K.S. Rajashekara and K. Al Haddad, "Analysis and Design of a Dual Series Resonant Converter for Utility Interface", IEEE PESC 1987 Conference, Blacksburg, Virginia, USA, June 22-26, 1987.

8.ACKNOWLEDGEMENT

This work is supported from grants received from the Department of Energy, Mines and Resources, Canada through the Department of Supply and Services, Canada.

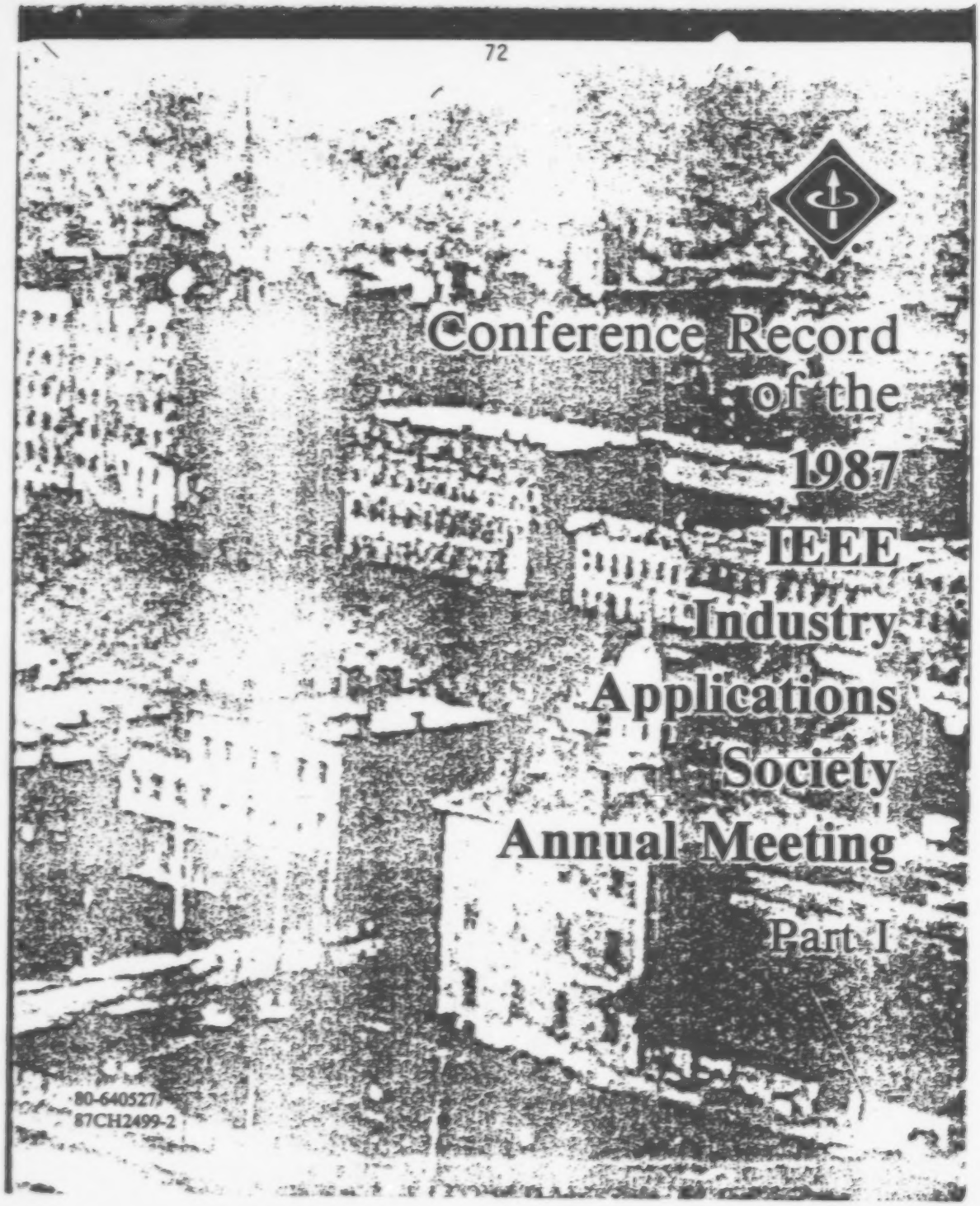
Conference Record
of the
1987
IEEE
Industry
Applications
Society
Annual Meeting
Part I
80-640527
87CH2499-2

ANALYSIS AND DESIGN OF A DUAL SERIES RESONANT CONVERTER FOR UTILITY INTERFACE

K.S.Rajashekara, A.Charette, K. Al Haddad and V. Rajagopalan
Département d'Ingénierie, Université du Québec à Trois-Rivières, Trois-Rivières, Qué., Canada, G9A 5H7

Abstract

The use of a dual series resonant converter with phase-shifted operation for utility interface is presented. The analysis, sequence of operation and detailed design for a 5 kW system are presented. The inverter operates at a fixed frequency above the resonant frequency in order to reduce the switching losses in the devices. A general purpose simulation program ATOSEC5 has been used to predict the performance of the converter and experimental results are given confirming the validity of the simulation results.

Introduction

With the increasing importance for the use of photovoltaic energy for residential systems, considerable research has been done on the power conditioning system between a variable dc source and the ac utility. The selection of the proper power circuit and its design for the conversion of photovoltaic dc power to the ac utility is the most important functional aspect of the total system. The use of high frequency dc link pulse width modulated (PWM) inverters as the power conditioning system has been reported in the literature[1-4]. In all these cases, the dc voltage of the photovoltaic array is first modulated to high frequency ac, which is transformer-coupled and demodulated using a high frequency diode rectifier. The rectified sinusoidal current is then unfolded using a transistor inverter and fed in phase with the ac utility voltage. This system has the disadvantages of high switching losses in the devices, large peak currents giving rise to higher stresses in the semiconductor devices. The system can also introduce undesirable noise and interference to the utility.

Recently, the use of parallel resonant converters as the power conditioning system has been reported [5]. In this case, the system is operated below the resonant frequency of the resonant circuit. This system has still considerable switching losses in the devices. As the power is controlled by varying the operating frequency, the performance of the system will not be good at all power levels. The system operates in a discontinuous mode below a certain frequency. This results in higher stresses in the devices at the turn-on instants, which would result in additional switching losses.

Dual Series Resonant Converter

The use of phase-shifted control of dual series resonant converter (DSRC) at constant frequency has several advantages over the variable frequency control. By fixing the operating frequency of the DSRC above the audible level, variable output voltage from a maximum to zero can be obtained by varying the phase shift from 0° to 180°. The series resonant circuit can be designed for optimum efficiency at a single operating frequency. A power conversion process employing two phase-modulated high frequency inverters with a tank circuit excited at resonant frequency is presented in reference 6. The use of two series and parallel resonant inverters with phase-shifted operation for induction heating applications is described in reference 7. The system uses thyristors and has been operated below the resonant frequency. In this paper, the use of a dual series resonant converter with phase-shifted operation for photovoltaic utility interface is presented. This scheme uses dual thyristors as the power devices[8]. The analysis, sequence of operation of the scheme and detailed design for a 5 kW dual series resonant inverter are presented. The system operates at a constant frequency of 23 kHz which is above the resonant frequency of the LC resonant circuit.

A general purpose simulation program ATOSEC5[9] has been used for the prediction of the different waveforms under any operating condition. An experimental converter has been built in order to confirm the validity of the simulation results.

Principle of Operation

A schematic diagram of the photovoltaic utility interface using DSRC is shown in fig.1. The photovoltaic dc power is obtained from a solar array simulator, which provides the characteristics similar to photovoltaic array. This dc power is converted to ac using two series resonant converters. Two dual-thyristors are used for each SRC; a dual-thyristor is essentially a bipolar transistor with a suitable control logic which gives the device those characteristics that are dual to that of a thyristor [8]. The use of dual-thyristors as devices for the series resonant converter enables the operation of the converter at a high frequency with lossless snubbers. The series resonant converters operate at a convenient fixed frequency. The switching instants for the devices in the same leg are complementary. The output power is controlled by varying the phase shift (O) between the turn-on instants of Q11 and Q21.

The duration of base drive for each dual-thyristor is 180°. When the phase shift between Q11 and Q21 is 0°, the current in the primary of the high frequency ferrite transformer is maximum; when the phase shift is 180°, the primary current is zero. Hence, by varying O between 0° and 180°, the output power can be controlled from a maximum to zero. The secondary current of the transformer is rectified and fed to the ac utility using a conventional transistor inverter acting as an unfolding stage. The devices in the unfolding stage inverter are switched on at the zero-crossings of the utility voltage.

The DSRC operates at a frequency above the resonant frequency of the LC resonant circuit. This mode of operation of the inverter results in negligible switching losses; because, each dual-thyristor automatically conducts when the device voltage exceeds a preset positive value (<4 V) and the current rise is smooth. Hence, a capacitor which acts as a lossless snubber across each dual-thyristor will be sufficient.

Control Scheme

A schematic diagram of the control scheme of the DSRC is shown in fig.2. A 120 Hz rectified sine wave is generated in phase with the ac utility voltage; using phase locked loop (PLL) and digital circuits, a 46080 Hz (2 x 768x60), the required phase-shift for the transistors Q21 and Q22 are generated.

The devices Q11 and Q12 are turned on at fixed points as illustrated in fig.3. The output power is varied by varying the amplitude of the rectified sine wave, which in turn varies the phase shift between Q11 and Q21.

Power Circuit

The semiconductor circuit elements used for the power circuit are the dual thyristors. The main characteristics of a dual thyristor are well described in the literature[8]. The schematic diagram of a dual thyristor is shown in fig.4. The dual thyristor is essentially a bipolar transistor with a suitable base control logic. The device is spontaneously turned on when its collector-emitter voltage is slightly positive. During turn-off, the sudden rise of voltage across the its terminals is prevented by the presence of a capacitor across the device.

CH2499-2/87/000-0711$1.00 © 1987 IEEE

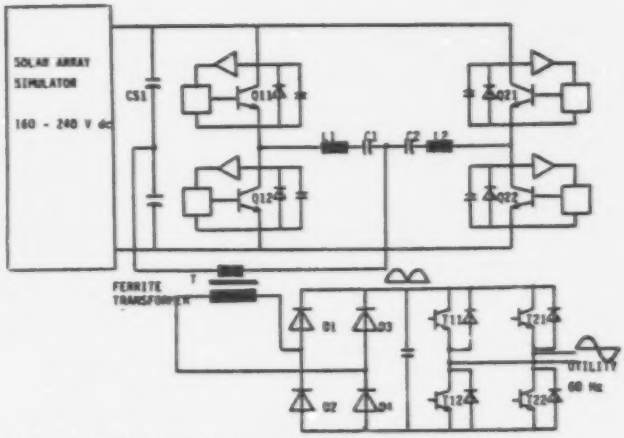

FIGURE 1: SCHEMATIC DIAGRAM OF PHOTOVOLTAIC UTILITY INTERFACE SYSTEM

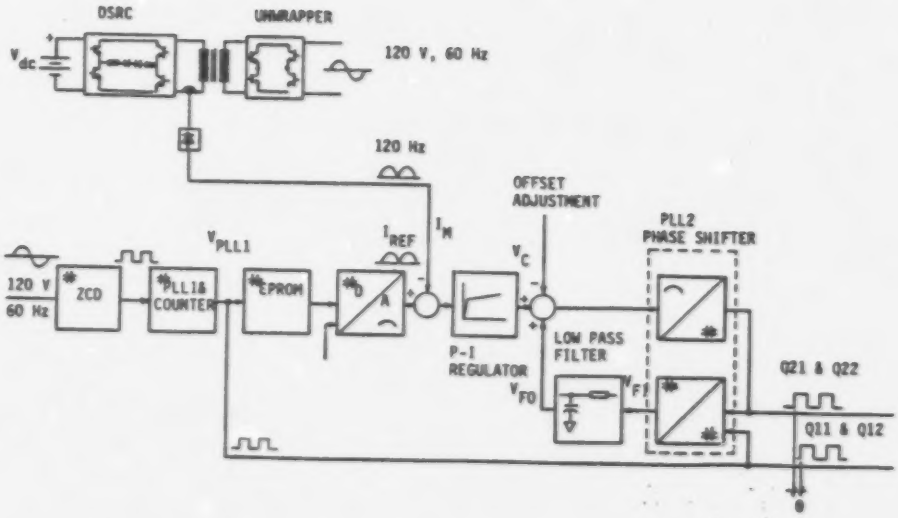

FIGURE 2: SCHEMATIC DIAGRAM OF THE PROPOSED CONTROL LOGIC

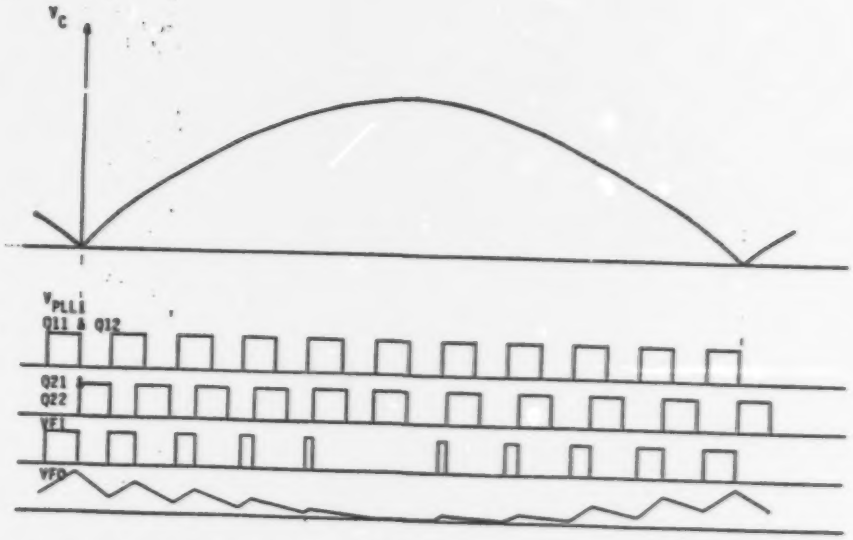

FIGURE 3: INPUT AND OUTPUT SIGNALS FROM THE CONTROL LOGIC UNIT

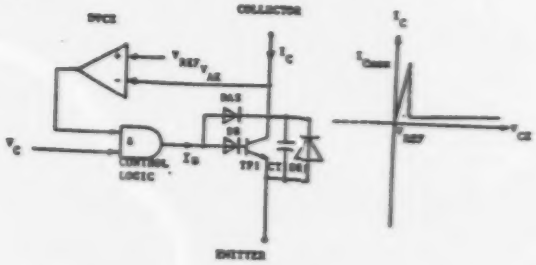

FIGURE 4: SCHEMATIC DIAGRAM OF A DUAL THYRISTOR

The unit DVCE in fig.4 detects the voltage across the device such that for $v_{ce} < V_{ref}$ the control signal V_c is present at the base drive for the main transistor TP1. The control logic thus ensures a spontaneous turn-on of the transistor TP1 as soon as the antiparallel-connected diode stops conducting.

The antisaturation diode DAS ensures that the main transistor is in quasi-saturated mode of operation in order that rapid turn-off of the device is possible. Further, any tendency of the the device voltage exceeding the V_{ref} value due to a sudden increase of collector current shuts off the base drive thereby ensuring instantaneous overcurrent protection of the device. Thus it can be seen that the dual thyristor device is well suited for resonant converter circuits in terms of autoprotection of the device and also autoregulation of the base current.

No dead time has been provided between the switching instants of the devices in the same leg. The base drive signals are isolated from the control circuit using ferrite core transformers. No isolated power supplies are required. The resonant circuit consists of aircore inductor and metallized polypropylene capacitors. These capacitors must have low inductance, low equivalent series resistance (ESR) and high ripple current capability at the operating frequency of 23 kHz. Sprague capacitors of type T35P have been found to be suitable for this application.

Design Example

Let the required specifications of the DSRC be as follows:

Power output, $P_u = 5$ kW

Ac utility voltage, $V_u = 120$ V

Ac utility frequency, $f_u = 60$ Hz

Array Dc input voltage, $V_{dc} = 160$ V(min)-240(max)

The objective is to obtain the rated power at the minimum array voltage.

Utility line current $= I_u = P_u/V_u = 41.66$ A

Average dc link voltage $= 2\sqrt{2}\ V_u/\pi = 108$ V

Average dc link current $= I_d = 2\sqrt{2}\ I_u/\pi = 37.5$ A

Peak value of dc link current $= \sqrt{2}\ I_u = 58.9$ A

Selecting a transformer turns ratio as 1: 2.25, the primary peak current can be calculated:

$I_p = 2.25 \times 58.9 = 132.5$ A

In the configuration shown in fig.1, the primary current is the sum of the two series resonant circuit currents:

$$I_p = I_{c1} + I_{c2}$$

The primary current is maximum, when the turn-on phase shift between the two half-bridges is 0° and it is a minimum when the phase shift is 180°. Hence the peak resonant circuit current at the minimum of the supply voltage is:

$$I_{c1} = I_p / 2 = 66.3 \text{ A}$$

Due to practical problems, it may not be possible to operate at exactly 0° phase shift. In order to obtain 66.3 A at more than 0° phase shift, about 12% more peak current is taken as peak resonant current, say 1.12 x 66.3 = 75 A. Choosing a resonant frequency of 18 kHz, the resonant circuit elements can now be calculated:

$$I_{cp} = E\sqrt{C/L} = 75 \text{ A}$$

$$f_r = 1 / 2\pi\sqrt{LC} = 18 \text{ kHz}$$

The values of C and L can be calculated from the above two relations:

$$C = I_{cp} / 2\pi f_r E$$

$$L = E / 2\pi f_r I_{cp}$$

At the minimum array dc voltage of 160 V, E = 80 V. Substituting the numerical values, the values of L and C can be calculated:

$L = 9.4\ \mu H$ ($\approx 10\ \mu H$) and $C = 8.29\ \mu F$ ($\approx 9\ \mu F$)

As the array dc input is increased, the phase shift has to be increased to keep the load current at the desired constant value. Further, at the maximum value of the array voltage of 240 V, the peak resonant current can be calculated:

$$I_{cp} = 120\sqrt{9/10} = 114 \text{ A}$$

The maximum peak current of Motorola MJ 10016 transistor is 75 A and 2 transistors in parallel can be used to meet the current requirements.

Simulation Results

A simulation study of the DSRC was done using a general purpose power converter simulator ATOSEC5[9]. The circuit for the simulation study is shown in fig.5, which considers the DSRC feeding a resistive load. A typical data for the ATOSEC5 simulator for the DSRC is shown in Table 1. Usually there will be eight operating modes for the normal operation of the DSRC. These modes are shown in fig.6. Figure 7 shows the plotted results for the computed resonant circuit currents and voltages, the output current and voltage waveforms. For the sake of illustration, a modulating frequency of 1/20 of the carrier frequency was chosen. The simulation results predict the sinusoidally modulated output current.

Experimental Results

An experimental DSRC scheme was built as given in fig.3. Figure 6 also shows the results for the resonant circuit inductor current, capacitor voltage, ac line voltage and ac line current when the dc array power is fed to the ac utility. We can notice that a nearly sinusoidal current is fed to the mains in phase with the ac utility voltage. These preliminary results show excellent promise for the development of a very efficient power conditioner of 5 kW capacity using the dual series resonant converter. This work is in progress and is expected to be reported in the near future.

Conclusions

The use of dual series resonant converter for utility interface operating at constant frequency has been discussed in this paper. It has been seen from experimental and simulation results, that a solar array power can be fed to utility at unity power factor. The amount of power transferred can be easily controlled by varying the phase shift between the two half bridges from 0° to 180°. The system has been operated at 23 kHz using lossless snubbers.

A design example has been worked out to illustrate the selection of power circuit elements. The use of dual-thyristors as power devices ensures autoprotection of the power devices. An experimental high frequency link utility interactive DSRC was built to demonstrate the use of DSRC for injecting sinusoidal current to the ac utility at unity power factor.

Acknowledgement

This work was supported from funds received from the Natural Sciences and Engineering Research Council, Canada and from the Department of Supply and Services, Canada.

References

[1] V. Rajagopalan, K. Al Haddad and J. Ayer, "Innovative Utility-Interactive dc to ac Power Conditioning Systems ", IEEE IECON Proceedings, San Francisco 1985, pp.471-476

TABLE 1: DATA FOR DSAC- ATOSECS SIMULATOR

```
* DUAL SERIES RESONANT CONVERTER
* DATA2: PESC87 UPDATED: 87-03-10
E,ESOU,COM,POS
C,CS01,POS,N01,20,MU
R,RS01,N01,N10,1,MI
R,RS02,N10,N02,1,MI
C,CS02,N02,COM,20,MU
T,TR11,POS,T11,0,MU
R,RR11,T11,NL1,0.1
T,TR12,NL1,T12,0,MU
R,RR12,T12,COM,0.1
D,DR11,NL1,DE1,2,MU
R,RD11,DE1,POS,0.1
D,DR12,COM,DE2,2,MU
R,RD12,DE2,NL1,0.1
R,RT11,POS,N11,1,MI
C,CT11,N11,NL1,0.02,MU
C,CT12,N12,COM,0.02,MU
R,RT12,NL1,N12,1,MI
T,TR21,POS,T21,0,MU
R,RR21,T21,NL2,0.1
T,TR22,NL2,T22,0,MU
R,RR22,T22,COM,0.1
D,DR21,NL2,DE3,2,MU
R,RD21,DE3,POS,0.1
D,DR22,COM,DE4,2,MU
R,RD22,DE4,NL2,0.1
R,RT21,POS,N21,1,MI
C,CT21,N21,NL2,0.02,MU
R,RT22,NL2,N22,1,MI
C,CT22,N22,COM,0.02,MU
C,CBR1,NL1,NL5,5,MU
C,CBR2,NL2,NL6,5,MU
L,LBR1,NL5,NL3,100,MU
L,LBR2,NL6,NL3,100,MU
L,LT,NL3,NL4,0.1,MU
R,RP,NL3,NL4,1111
R,RL,NL4,NE1,1
E,EL,NE1,N10
0
2,CS01,100,CS02,100
0
0
0
1,-200,0,0,0,0
2,000,767,0,0,0
3,100,23E03,0,0,0
3,100,23E03,-100,0,0
1,0,0,0,0,0
1,0,0,0,0,0
R,100,23E03,-00,0,0
0,100,23E03,-100,0,0
1,0,0,0,0,0
1,0,0,0,0,0
0,0,0,0,0,0,0,0
-0.1,-0.1,-0.1,-0.1,-0.1
-0.1,-0.1,-0.1
2,2,2,2,2
3,2,2
100,100,0,0,100
100,0,0
0,0,0,0,0
0,0,0
0,1E-03,0.5E-06,0,0,0,5,320,0
5,0,0,0,0,0,0,0,0
0,0,0,0,0,0,0,30,0
0,0,0,9,5,0,0,0,0,0
```

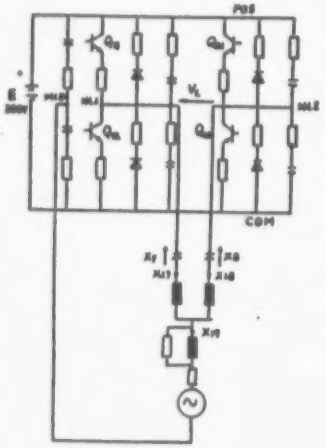

FIGURE 5: DSAC CIRCUIT FOR ATOSECS SIMULATOR

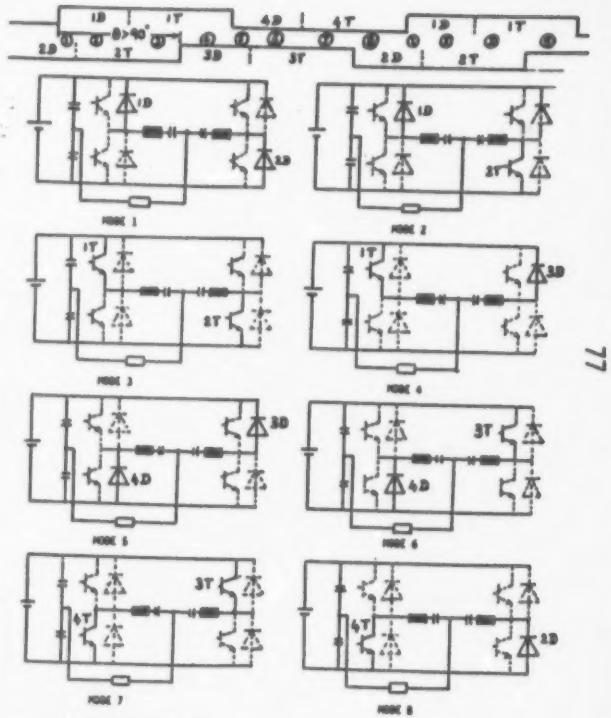

FIGURE 6: OPERATING MODES OF DSAC- θ>90°

[2] V. Boegli and R. Ulmi, "Realization of New Inverter Circuit for Direct Photovoltaic Energy Feedback into the Public Grid", IEEE Trans.on Industry Applications, Vol.IA-22, pp.255-258, March/April 1986.

[3] B.K.Bose et al, "Microcomputer Control of a Residential Photovoltaic Power Conditioning System", IEEE Trans.on Industry Applications, Vol.IA-21, pp.1182-1191, September/October 1985.

[4] A. Coconi et, "High Frequency Isolated 4 kW Photovoltaic Inverter for Utility Interface", Proc.PCI Conference, September 13-15, 1983, Geneva.

[5] A.K.S. Bhat and S.B. Dewan, "Analysis and Design of a High Frequency Link DC to Utility Interface Using Square Wave output Resonant Inverter", IEEE-PESC, Vancouver, pp.333-342, 1986.

[6] L.J.Pitel, "Phase Modulated resonant Power Conversion Techniques for High Frequency Link Inverters", IEEE Trans.on Industry Applications, Vol.IA-22, No.6, pp.1044-1051, Nov/Dec 1986.

[7] P. Savary et al, "Resonant Vector Control Based High Frequency Inverter", IEEE-PESC, Toulouse, pp.204-213, 1985.

[8] K. Al Haddad et al, "DC to DC Converters with High Frequency AC Link", IEEE Trans.on Industry Applications, Vol.IA-22, No.2, pp.244-254, March/April 1986.

[9] V. Rajagopalan, Computer-Aided Analysis of Power Electronic Systems, Marcel Dekker Inc, New York, 1987.

[10] V. Rajagopalan, K.S. Rajashekara and K. Al Haddad, "Analysis and Design of a Dual Series Resonant Converter for Utility Interface", IEEE PESC 1987 Conference, Blacksburg, Virginia, USA, June 22-26, 1987.

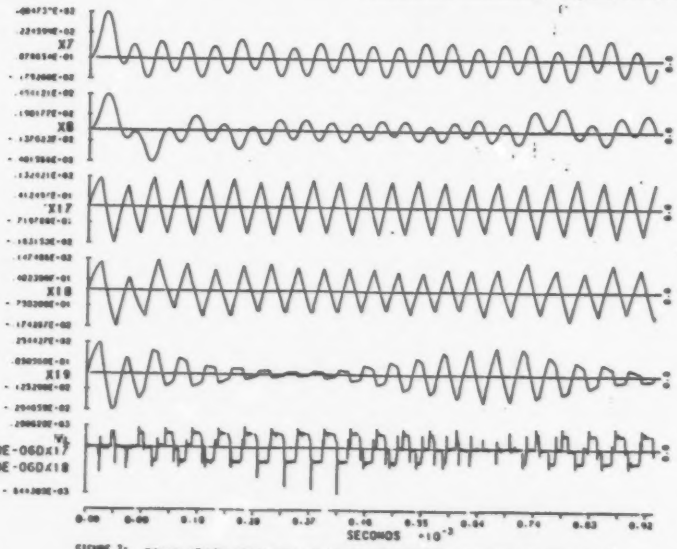

FIGURE 7: SIMULATION RESULTS OF DSRC ON RESISTIVE LOAD 87-03-19

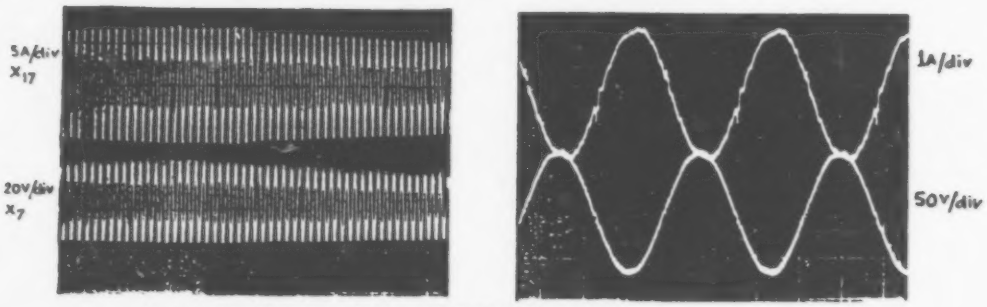

FIGURE 7: EXPERIMENTAL WAVEFORMS

RESONANT CIRCUIT INDUCTOR CURRENT AND CAPACITOR VOLTAGE

OUTPUT AC LINE CURRENT AND UTILITY MAINS VOLTAGE